Pella® Reserve™ Traditional

Photograph(s):
© Scott Barrow Photography

Authentically Detailed.

Meticulously designed to replicate the historical millwork process, Pella® Reserve™ Traditional offers unparalleled authenticity. Each piece is original, featuring excellent craftsmanship to reflect your project's unique personality and customized to fit your vision.

- A wide range of glazing options, including impact-resistant.
- Divided light options available in Integral Light Technology® grilles, or grilles-between-the-glass with standard or custom patterns.
- Wide range of historically authentic features and attributes including butt joinery and through stiles.
- Two exterior sash and grille profiles are available: Ogee and Putty Glaze.
- Virtually unlimited exterior color options with EnduraClad® protective finish, including custom colors.

Insynctive® Available with factory-installed integrated security sensors.

Pella LIMITED LIFETIME WARRANTY

Wood Windows and Patio Doors

	Cross Section	Frame / Install	Wall Depth Range	Performance Range
Awning Vent and Fixed	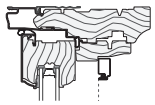	Fold-out Fin Block Frame EnduraClad Exterior Trim / Brickmould	Base Frame Depth: 5" Std. Fin Setback: 1-5/16" Base Wall Depth: 3-11/16" Jamb extended wall depth: 3-11/16" – 9-3/16"	LC30 – CW50 U: 0.20 – 0.49 SHGC: 0.16 – 0.54 STC: up to 33
Casement Vent and Fixed	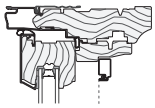	Fold-out Fin Block Frame EnduraClad Exterior Trim / Brickmould	Base Frame Depth: 5" Std. Fin Setback: 1-5/16" Base Wall Depth: 3-11/16" Jamb extended wall depth: 3-11/16" – 9-3/16"	LC30 – CW50 U: 0.19 – 0.51 SHGC: 0.16 – 0.64 STC: up to 34
Fixed Frame Direct Set	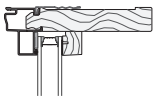	Standard Fold-out Fin Block Frame EnduraClad Exterior Trim / Brickmould	Base Frame Depth: 5" Std. Fin Setback: 1-3/16" Base Wall Depth: 3-11/16" Jamb Extended Wall Depth: 3-11/16" – 9-3/16"	F-CW30 – F-AW90 U: 0.17 – 0.48 SHGC: 0.20 – 0.68 STC: up to 38
Single and Double-Hung	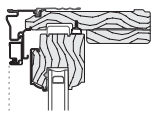	Fold-out Fin Block Frame EnduraClad Exterior Trim / Brickmould	Base Frame Depth: 5" Std. Fin Setback: 1-5/16" Base Wall Depth: 3-11/16" Jamb extended wall depth: 3-11/16" - 9-3/16"	CW30 – CW50 U: 0.24 – 0.46 SHGC: 0.19 – 0.60 STC: up to 31
Precision Fit Double-Hung	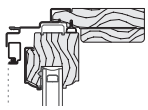	Pocket Replacement	Overall frame depth: 4" Pocket frame depth: 3-1/4"	CW40 – CW50 U: 0.25 – 0.46 SHGC: 0.19 – 0.61
Monumental-Hung	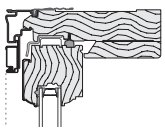	Fold-out Fin Block Frame EnduraClad Exterior Trim / Brickmould	Base Frame Depth: 5-7/8" Std. Fin Setback: 1-5/16" Base Wall Depth: 4-9/16" Jamb extended wall depth: 4-9/16" - 7-3/16"	LC25 – CW50 U: 0.20 – 0.44 SHGC: 0.16 – 0.54 STC: up to 33
In-Swing Patio Door	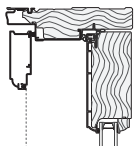	Fold-out Fin Block Frame EnduraClad Exterior Trim / Brickmould	Base Frame Depth: 5-7/8" Std. Fin Setback: 1-5/16" Base Wall Depth: 4-9/16" Extended wall depth: 4-9/16" – 7-5/16"	LC40 – LC55 U: 0.23 – 0.42 SHGC: 0.13 – 0.45 STC: up to 34
Out-Swing Patio Door	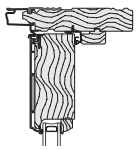	Fold-out Fin Block Frame EnduraClad Exterior Trim / Brickmould	Base Frame Depth: 5-7/8" Std. Fin Setback: 1-5/16" Base Wall Depth: 4-9/16" Jamb Extended wall depth: 4-9/16" – 9-3/16"	LC50 – LC70 U: 0.22 – 0.42 SHGC: 0.13 – 0.44 STC: up to 35
Sliding Patio Door	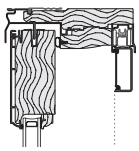	Fold-out Fin Block Frame EnduraClad Exterior Trim / Brickmould	Base Frame Depth: 5-7/8" Std. Fin Setback: 1-5/16" Base Wall Depth: 4-9/16" Jamb Extended wall depth: 4-9/16" – 9-3/16"	LC25 – LC70 U: 0.25 – 0.44 SHGC: 0.14 – 0.48 STC: up to 35
Bifold Patio Door	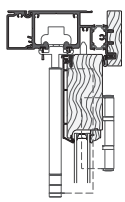	Contact your local Pella sales representative or Pella Architectural Solutions for assistance and additional details.		Out-Swing, Standard Sill: R15 - LC25 U: 0.26 – 0.44 SHGC: 0.13 – 0.45
Multi-slide Patio Door	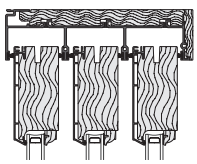	Contact your local Pella sales representative or Pella Architectural Solutions for assistance and additional details.		1-1/2" Weep sill: R15 – LC35 Varies by sill type: U: 0.32 – 0.48 SHGC: 0.15 – 0.46

Performance ranges shown are for single units and do not account for combinations (multiple units mulled together). Drawings are not to scale.

Window Frame Dimensions

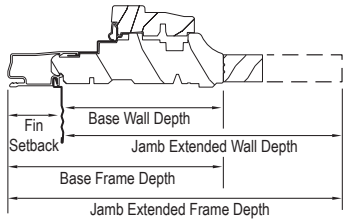

Standard Fold-Out Fin

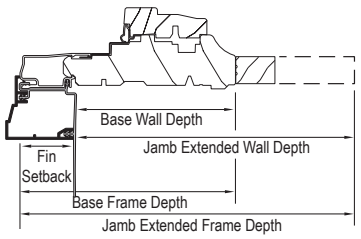

EnduraClad Exterior Trim / Brickmould

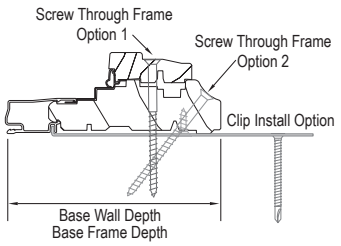

Block Frame/ Installation Clip

In-Swing Door Frame Dimensions

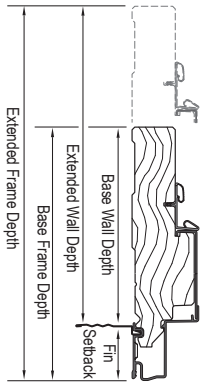

Standard Fold-Out Fin

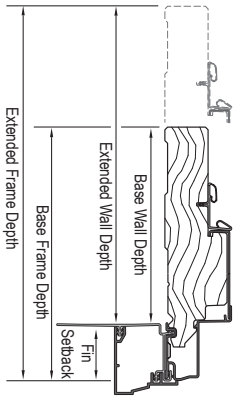

EnduraClad Exterior Trim / Brickmould

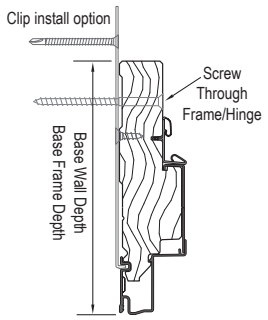

Block Frame/ Installation Clip

Out-Swing Door Frame Dimensions

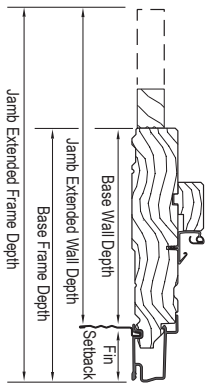

Standard Fold-Out Fin

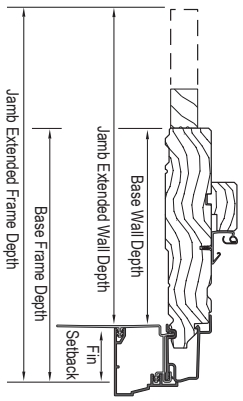

EnduraClad Exterior Trim / Brickmould

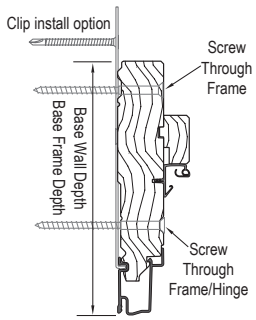

Block Frame/ Installation Clip

Window and door frames shown are typical products only and may not apply to specialty windows, custom products or multi-panel patio doors.

For installation instructions visit https://www.pella.com/professionals/installation-instructions/

Use this Quick-Read (QR) code with your mobile device for quick access.

You may need to first install a QR code reading app. An Internet connection is required.

Rolscreen® Retractable Screens

Optional Rolscreen Retractable Screen rolls out of sight when you're not using it, so the screen stays protected.

Soft-closing retractable screens are available for casement windows and sliding patio doors.

Integrated Rolscreen® Retractable Screen

Our patented retractable screen that moves seamlessly with the sash of a single- or double-hung window – appearing when you open the window and rolling out of sight when you close it. Providing a cleaner, more polished look that allows more natural light into the space than a full screen.

This feature is exclusively offered on Pella® Reserve™ windows.

WARNING: Screen will not stop child or pet from falling out of window or door. Keep child or pet away from open window or door.

Finishes

EnduraClad® Protective Finish Options + Virtually Unlimited Custom Colors and Wood Options

EnduraClad®

White | Black | Brown | Fossil

Iron Ore | Portobello | Putty | Almond | Classic White | Brick Red | Hartford Green | Pearl Gray

Soft Linen | Satin Steel | Matte Gray | Wolf Gray | Spice Red | Sage | Frost Blue | Blue Ash

Wood

Unfinished Mahogany | Primed (Pine or Mahogany)

Interior Prefinished Colors

Dark Mahogany Stain | Early American Stain | Golden Oak Stain | Natural Stain | Provincial Stain | Red Mahogany Stain | Espresso Stain

Black Stain | Charcoal Stain | White | Bright White | Linen White | Primed

Screens

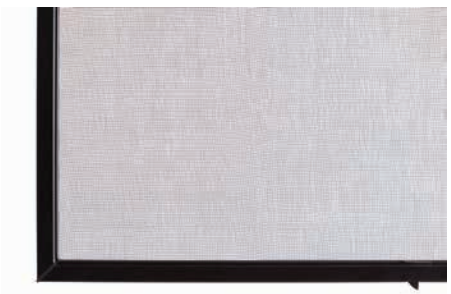

InView™ Screen

Standard screen on Pella wood windows and patio doors, as well as Rolscreen® retractable screen on casement windows and sliding patio doors, and Integrated Rolscreen® on Pella® Reserve™ single- and double-hung windows.

Vinyl coated 18/18 mesh fiberglass. Complies with performance requirements of SMA 1201.

Because of printing and display limitations, actual colors may vary from those shown.

Grilles

For a full list of grille size and pattern availability, contact your local Pella sales representative.

Integral Light Technology® Grilles

- Extruded aluminum or wood grilles are adhered to the exterior face
- Wood grilles are adhered to the interior face
- Between-the-glass non-glare spacers, which are aligned with the interior and exterior grilles, replicate the appearance of true divided lights
- Typical grilles are 7/8" wide Putty Glazed or Ogee profile, other standard and custom widths are available
- Custom grille patterns are available

Grille Profile

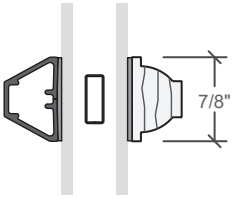

5/8", 7/8", 1-1/4", and 2" widths

Grilles-Between-the-Glass [1]

- Permanent aluminum grilles are factory-installed inside the airspace of insulating glass
- Black, White, Brown, Fossil, Ivory, Harvest, or Cordovan.
- Colors complement today's most popular interior finishes; choose a color to coordinate with the window or door frame, or select a contrasting grille color for a one-of-a-kind look
- Grilles are 3/4" wide

Grille Profile

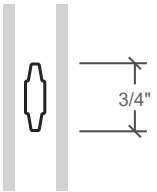

3/4" width

GBG Colors

Black | White | Brown | Fossil | Ivory | Harvest | Cordovan

Available Patterns

Traditional	9-Lite Prairie	Top Row	Cross	Custom Equally Divided
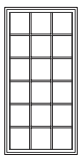	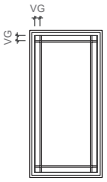	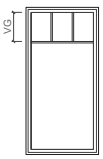	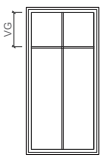	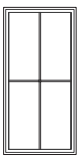

Pattern availability may vary depending on size of unit.

Custom configurations are also available; for details contact your local Pella sales representative.

1) Appearance of exterior grille color may vary depending on the Low-E insulating glass selection.

Hardware

Consult your local Pella sales representative for a full list of available hardware options.

Rustic Collection

Casement/Awning Window

Double-Hung Window

Hinged Patio Door Bifold Door[1]

Sliding Patio Door, Multi-slide Door[2]

Finishes

Distressed Nickel

Distressed Bronze

Classic Collection

Casement/Awning Window

Double-Hung Window

Hinged Patio Door Bifold Door[1]

Sliding Patio Door, Multi-slide Door[2]

Finishes

White

Champagne

Brown

Matte Black

Satin Brass

Satin Nickel

Oil-Rubbed Bronze

Essential Collection

Casement/Awning Window

Double-Hung Window

Hinged Patio Door Bifold Door[1]

Sliding Patio Door

Finishes

White

Champagne

Brown

Matte Black

Satin Brass

Satin Nickel

Oil-Rubbed Bronze

Flush multi-slide handle is a Pella exclusive design.

Multi-Slide Door

Finishes

White

Brown

Matte Black

Satin Brass

Satin Nickel

Oil-Rubbed Bronze

Polished Chrome

Custom Capabilities

Consult your local Pella sales representative for available options.

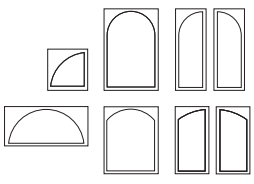
Custom Glass Shapes Available

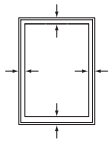
Custom Stile and Rail Widths Available

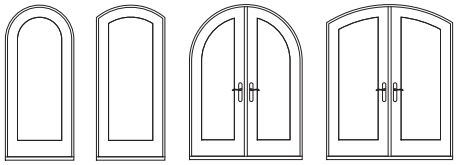
Custom Door Shapes Available

(1) Only available on Bifold configurations with a passage door. (2) Will not allow lead panel to stack completely.
Because of printing and display limitations, actual colors may vary from those shown.

Pella® Reserve™ Traditional

Awning

Air, Water, & Structural Performance

Performance Class & Grade Rating	Water Penetration Resistance	Air Infiltration	Design Pressure	Forced Entry
LC30 – CW50	14.62 psf	0.05	30 – 50 psf	10

Thermal Performance

Clad Vent Units

11/16" glass thickness, 3mm, Dual-Pane;

Triple-Pane also available.

Type of Glazing (Argon fill)	U-Factor	SHGC	VLT %	CR	Energy Star® Capable
Advanced Low-E IG	0.29 – 0.33	0.25 – 0.27	0.46 – 0.51	52 – 56	—
SunDefense™ Low-E IG	0.28 – 0.32	0.19 – 0.21	0.42 – 0.47	52 – 56	SC, S
SunDefense+ Low-E IG	0.25 – 0.28	0.18 – 0.20	0.41 – 0.45	40 – 44	NC, SC, S
AdvancedComfort Low-E IG	0.26 – 0.28	0.24 – 0.27	0.45 – 0.49	40 – 44	—
NaturalSun Low-E IG	0.30 – 0.34	0.45 – 0.50	0.52 – 0.57	52 – 56	—
NaturalSun+ Low-E IG	0.26 – 0.29	0.41 – 0.46	0.51 – 0.56	39 – 43	CA ,N

Sound Performance

Frame Size Tested	Type of Glazing		Without Grilles STC	Without Grilles OITC
Vent; 53" x 29"	11/16" Overall thickness	2.5mm / 2.5mm glass	27	23
Vent; 59" x 23"	11/16" Overall thickness	5mm / 3mm glass	32	27
		3mm / 6mm glass PVB	33	28
	1" Overall thickness	3mm / 3mm / 3mm glass	30	24
Fixed; 47" x 59"	11/16" Overall thickness	3mm / 3mm glass	28	24
		5mm / 3mm glass	31	27
		3mm / 6mm glass PVB	32	28

ASTM E 1425 defines standard sizes for acoustical testing. Ratings achieved at that size are representative of all sizes of the same configuration.

Code Approvals: Hallmark Certified; **FPAS#:** Standard=FL 10026; Large Awning= FL 10022

See the Performance section to learn more about performance standards and ratings. Performance varies based on actual product attributes.

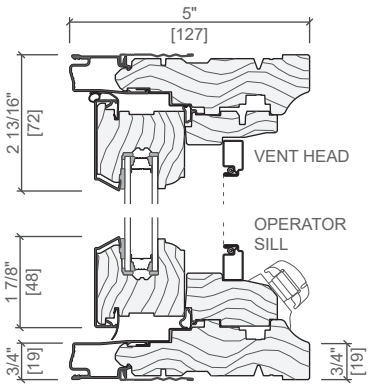

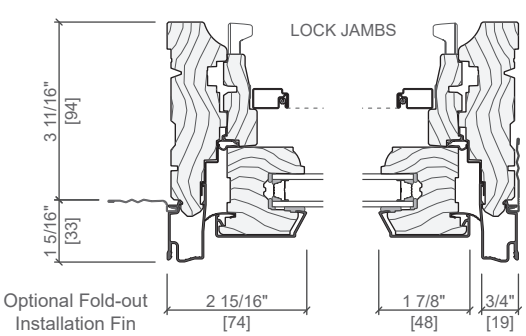

Other frame types are available. Not to scale. All dimensions are approximate. Large Awning shown.

Standard Sizes

Vent Units

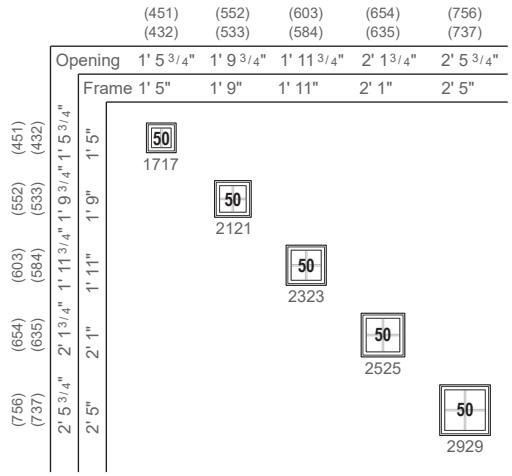

Vent and Fixed Units

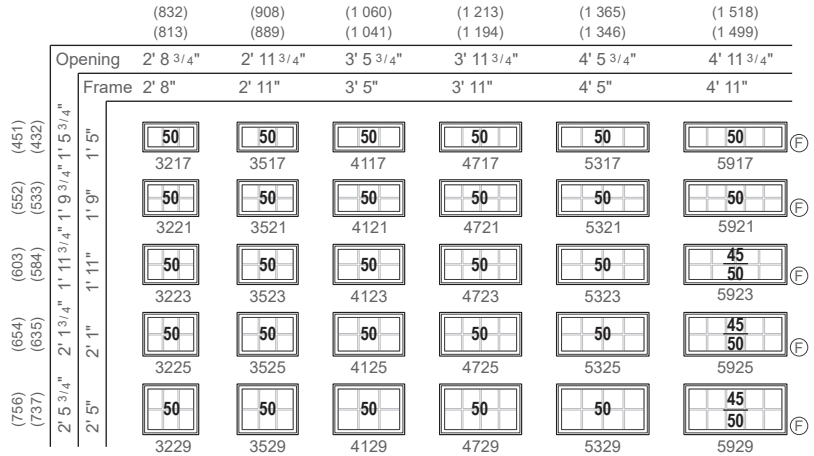

Large Awning Standard Sizes

Vent Units

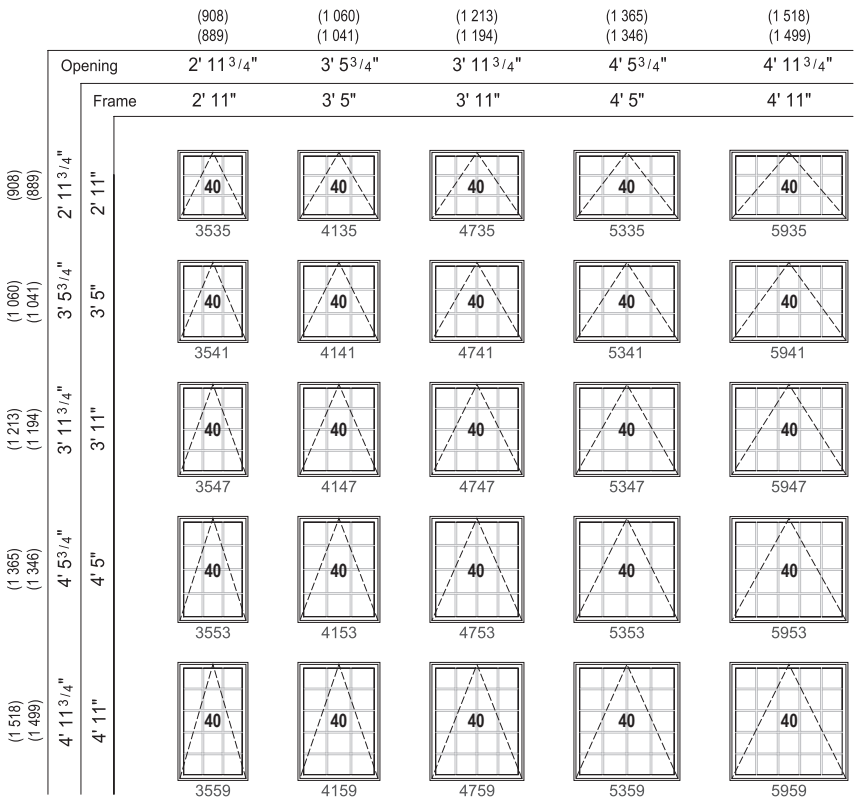

Special Sizes

Special sizes are available in 1/8" increments.

Vent

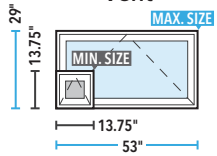

Maximum frame area is 19.5 sq. ft.

Frame height cannot exceed frame width on venting standard awning special sizes.

Large Awning

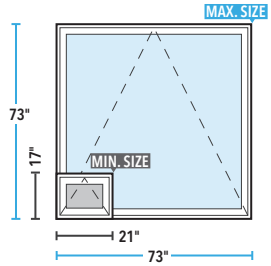

Frame width and frame height cannot both exceed 59" on venting large awning special sizes.

See Casements for available fixed size dimensions.

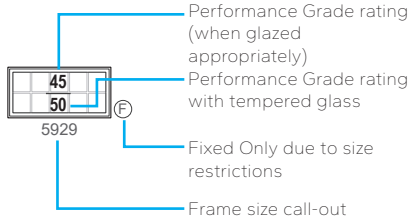

Impact-Resistant laminated glazing with higher design pressure ratings available.

Pella® Reserve™ Traditional

Casement

Air, Water, & Structural Performance

Performance Class & Grade Rating	Water Penetration Resistance	Air Infiltration	Design Pressure	Forced Entry
LC30 – CW50 Push-Out Casement: R30	14.62 psf	.05	30 – 50 psf	10

Thermal Performance

Clad Vent Units

11/16" glass thickness, 3mm ,Dual-Pane;

Triple-Pane also available.

Type of Glazing (Argon fill)	U-Factor	SHGC	VLT %	CR	Energy Star® Capable
Advanced Low-E IG	0.29 – 0.33	0.25 – 0.27	0.46 – 0.51	54 – 57	—
SunDefense™ Low-E IG	0.28 – 0.33	0.19 – 0.21	0.42 – 0.47	54 – 57	SC, S
SunDefense+ Low-E IG	0.25 – 0.28	0.18 – 0.20	0.41 – 0.46	42 – 45	NC, SC, S
AdvancedComfort Low-E IG	0.25 – 0.28	0.24 – 0.27	0.45 – 0.49	41 – 45	NC
NaturalSun Low-E IG	0.30 – 0.34	0.45 – 0.50	0.52 – 0.57	53 – 56	—
NaturalSun+ Low-E IG	0.26 – 0.29	0.41 – 0.46	0.51 – 0.56	41 – 44	CA, N

Sound Performance

Frame Size Tested	Type of Glazing		Without Grilles	
			STC	OITC
Vent; 23" x 59"	11/16" Overall thickness	2.5mm / 2.5mm glass	27	23
		5mm / 3mm glass	32	27
		3mm / 6mm glass PVB	33	28
	1" Overall thickness	3mm / 3mm / 3mm glass	30	24
Fixed; 47" x 59"	11/16" Overall thickness	3mm / 3mm glass	28	24
		5mm / 3mm glass	31	27
		3mm / 6mm glass PVB	32	28

Code Approvals: Hallmark Certified; Vent: **FPAS#:** FL 10015; Fixed: **FPAS#:** FL 10022

See the Performance section to learn more about performance standards and ratings. Performance varies based on actual product attributes.

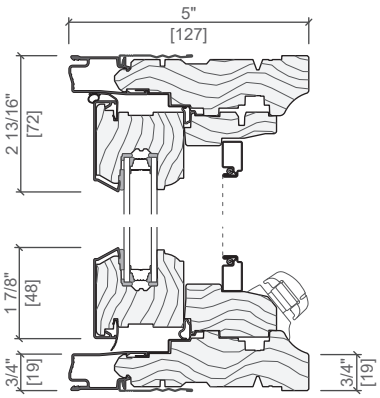

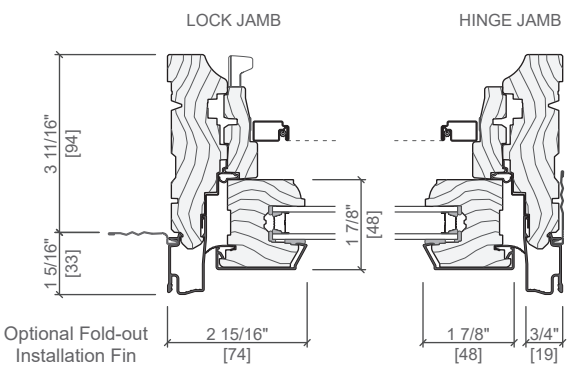

Other frame types are available. Not to scale. All dimensions are approximate.

Standard Sizes

Vent and Fixed Units

Opening		(451) (432)	(552) (533)	(603) (584)	(654) (635)	(756) (737)	(832) (813)	(908) (889)
	Frame	1' 5"	1' 9"	1' 11"	2' 1"	2' 5"	2' 8"	2' 11"
(1 822) (1 803)	5' 11 3/4"	1771 T	2171	2371	2571 E2	2971 E	3271 E	3571 E
(1 873) (1 854)	6' 1 3/4"	1773 T	2173	2373	2573 E2	2973 E	3273 E	3573 E

Special Sizes

Special sizes are available in 1/8" increments.

Vent Sizes

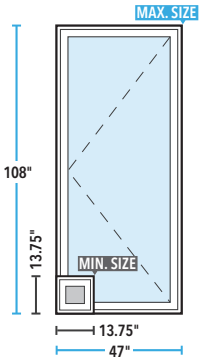

Frame width cannot exceed frame height on vent special sizes. Maximum frame area cannot exceed 36 sq. ft.

Fixed Sizes

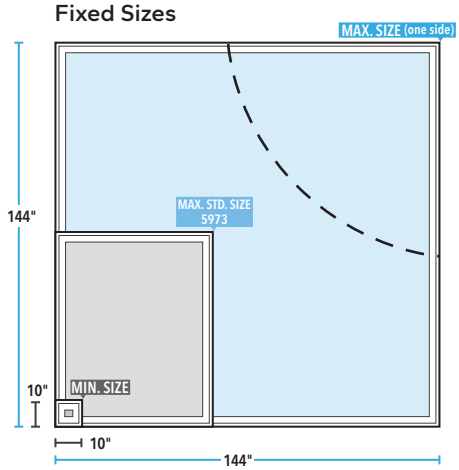

Fixed maximum frame area is 66.25 sq. ft.
Maximum glass area cannot be greater than 60 sq. ft.

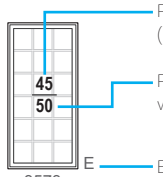

Performance Grade rating (when glazed appropriately)

Performance Grade rating with tempered glass

Egress note or tempered glass requirement

Frame size call-out

Ⓕ Fixed units only.

T Tempered glass is standard.

For frame width ≤ 29 with side pivot hardware, maximum Performance Grade = 40.

Impact-Resistant laminated glazing with higher design pressure ratings available.

Egress Notes:

- E = Window meets minimum clear opening of 24" height, 20" width, and 5.7 sq. ft.
- E1 = Window meets minimum clear opening of 24" height, 20" width, and 5.0 sq. ft.
- E2 = With optional side pivot hardware, window meets minimum clear opening of 24" height, 20" width, and 5.7 sq. ft.
- E3 = With optional side pivot hardware, window meets minimum clear opening of 24" height, 20" width, and 5.0 sq. ft.

Check all applicable local codes for emergency egress requirements.

Special sizes wider than 35" do not meet egress due to restricted sash opening angle.

Pella® Reserve™ Traditional

Casement Shapes

Shapes and Sizes

Fixed Curved	Side	Min.	Max.
Half Circle	W	18"	116"
	H	9"	58"
	R1	9"	58"
Quarter Circle	W	9"	87-7/8"
	H	9"	87-7/8"
	R1	9"	87-7/8"
Springline*	W	18"	122-5/8"
	H	11"	144"
	R1	9"	72"
	S	2"	—
Partial Springline*	W	9"	86-7/8"
	H	11"	144"
	R1	9"	500"
	S	2"	—
Full Chord	W	23"	144"
	H	10-1/2"	(W÷2)-1
	R1	12"	150"
Partial Chord	W	9"	128-1/2"
	H	10-1/2"	128-1/2"
	R1	10-1/8"	500"
Elliptical	W	40-3/4"	144"
	H	11-1/4"	54"
	R1	9"	500"
	R2	9-1/4"	500"
Partial Elliptical	W	9-1/4"	144"
	H	9-1/8"	54"
	R1	9"	500"
	R2	9"	41"
Arch Head*	W	9"	41"
	H	9-1/16"	144"
	R1	9"	500"
	S	8"	—

Fixed Curved	Side	Min.	Max.
Partial Arch Head*	W	9"	144"
	H	9-1/8"	144"
	R1	10-3/8"	500"
	S	9"	96"
Gothic Springline	W	9"	111-15/16"
	H	9-13/16"	144"
	R1	9"	500"
	S	2"	—
Full Circle	W	18"	72"
	H	18"	72"
	R1	9"	36"
Segmented Oval	W	22-1/2"	54"
	H	30"	72"
	R1	13-1/8"	500"
	R2	9"	500"
Partial Toroid	W	10"	144"
	H	10"	144"
	R1	> 12"	< R2 - 9"
	R2	> 21"	< 88"
Pie Toroid	W	10"	144"
	H	10"	144"
	R2	> 9"	< 88"
Elliptical Springline	W	18"	144"
	H	11"	144"
	R1	9"	500"
	R2	9"	500"
	S	2"	—
Gothic	W	9"	113-3/4"
	H	9"	144"
	R1	9"	500"

Fixed Angled	Side	Min.	Max.
Trapezoid*	W	9"	144"
	H	9-1/16"	144"
	S1	9"	144"
Pentagon*	W	9"	144"
	H	16-13/16"	144"
	S1/2	9"	144"
Isosceles Triangle	W	11-1/4"	144"
	H	11-1/4"	135-5/16"
	S	11-1/4"	144"
Triangle	W	11-1/4"	144"
	H	11-1/4"	141-3/4"
	S	9"	144"
Octagon	W	21-3/4"	87-7/8"
	H	21-3/4"	87-7/8"
	S	9"	39-3/4"
Hexagon	W	18"	89"
	H	15-19/32"	77"
	S	9"	44-1/2"
Clipped Corner	W1	12-1/4"	120"
	W2	9"	—
	H	12-1/4"	120"
	S	9"	—

Fixed Angled	Side	Min.	Max.
Double Clipped Corner	W1	15-3/16"	144"
	W2	9"	—
	H	12-1/8"	144"
	S	10-1/4"	120"
Parallelogram	W1	10"	144"
	W2	1"	—
	H	9"	144"
Truncated Triangle	W1	9-1/16"	144"
	W2	9"	—
	H	9"	144"
	S	9"	144"
Inverted Trapezoid	W	9"	144"
	H	9"	144"
	S	9"	—
Inverted Right Triangle	W	11-1/4"	135-5/16"
	H	11-1/4"	135-5/16"
	S	9"	144"
Rotated 90° Parallelogram	W	9"	144"
	H1	9"	144"
	H2	1"	—

* Vent also available. Sizes may differ.

Casement Shapes

Air, Water, & Structural Performance	Performance Class & Grade Rating	Water Penetration Resistance	Air Infiltration	Design Pressure	Forced Entry
	LC40 – CW50	7.5 psf	.05	40 – 50 psf	10

Thermal Performance Clad Vent Units 11/16" glass thickness, 3mm ,Dual-Pane; Triple-Pane also available.	Type of Glazing (Argon fill)	U-Factor	SHGC	VLT %	CR	Energy Star® Capable
	Advanced Low-E IG	0.29 – 0.33	0.25 – 0.27	0.46 – 0.51	54 – 57	—
	SunDefense™ Low-E IG	0.28 – 0.32	0.19 – 0.21	0.43 – 0.47	54 – 58	SC, S
	SunDefense+ Low-E IG	0.25 – 0.28	0.18 – 0.20	0.42 – 0.46	42 – 46	NC, SC, S
	AdvancedComfort Low-E IG	0.25 – 0.28	0.24 – 0.27	0.45 – 0.50	42 – 45	NC
	NaturalSun Low-E IG	0.29 – 0.34	0.46 – 0.50	0.52 – 0.57	53 – 57	—
	NaturalSun+ Low-E IG	0.26 – 0.29	0.41 – 0.46	0.51 – 0.56	41 – 44	CA, N

Code Approvals: Hallmark Certified; **FPAS#:** FL 11282

Maximum performance when glazed with the appropriate glass. See the Performance section earlier in this manual to learn more about performance standards and ratings.

Performance varies based on actual product attributes.

Mitered Corner		Fixed	Minimum	Maximum	Restrictions
Fixed Sash in Frame (Casement)	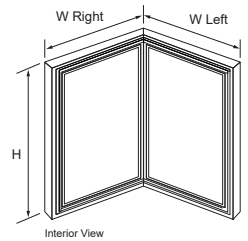	W Left	12"	4' 0"	Maximum frame area of each side cannot exceed 54.5 sq. ft. Maximum Glass Area of each side cannot exceed 48 sq. ft.
		W Right	12"	4' 0"	
		Height	12"	6'1"	
Fixed Frame Direct Set	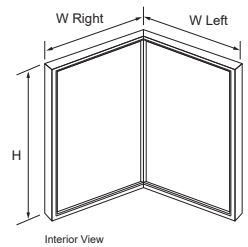	W Left	12"	4' 8"	Maximum frame area of each side cannot exceed 54.5 sq. ft. Maximum glass area of each side cannot exceed 48 sq. ft. See Fixed Frame Direct Set product section for features and options.
		W Right	12"	4' 8"	
		Height	12"	6' 1"	

Pella® Reserve™ Traditional

Fixed Frame Direct Set

Photograph(s):
© 2018 Ed Massery

Sizes are available in 1/8" increments.

Fixed Interior Glazed

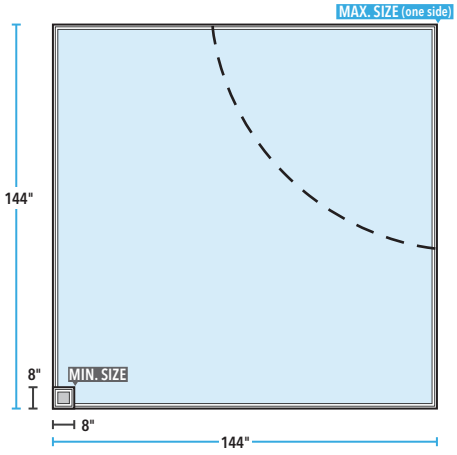

Interior Glazed Fixed Frames are available up to a maximum glass area of 76 sq. ft. (7.06 m²). Not all sizes are certified.

Impact Resistant Glazing is limited to a maximum frame area of 50 sq. ft.

See online ADM or contact your local Pella sales representative for size and performance limitations of Mitered Corner windows.

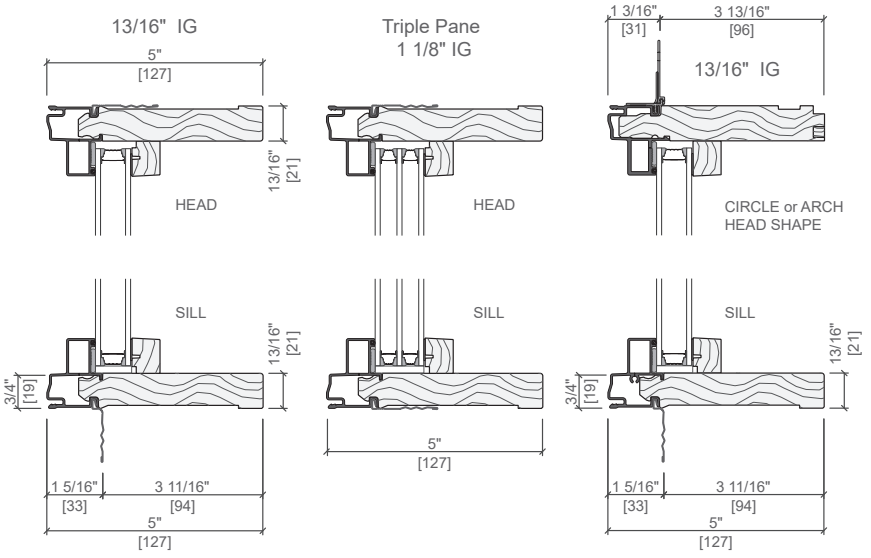

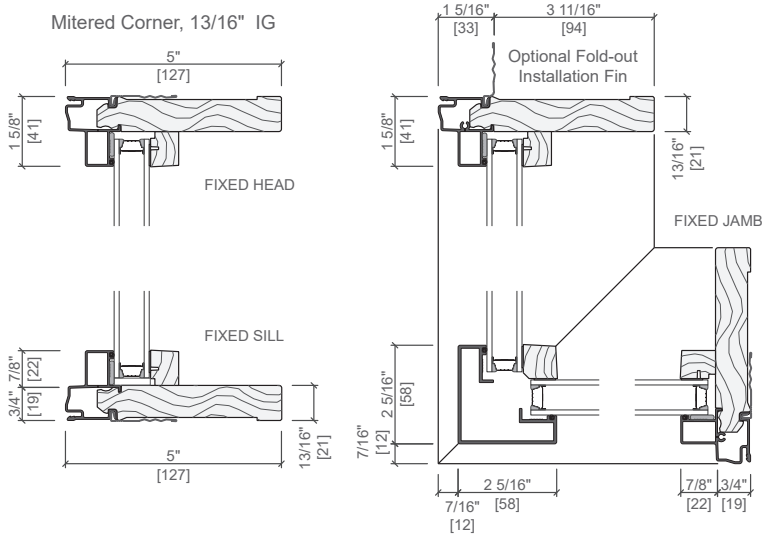

Other frame types are available.

Not to scale. All dimensions are approximate.

Sizes & Performance – Interior Glazed

Air, Water, & Structural Performance

Performance Class & Grade Rating	Water Penetration Resistance	Air Infiltration	Design Pressure	Forced Entry
F-CW30 – F-CW90	14.62 psf	0.05	30 – 90 psf	—

Thermal Performance

	Type of Glazing (Argon fill)	U-Factor	SHGC	VLT %	CR	Energy Star® Capable
Fixed Units						
Dual Pane: 13/16" glass thickness, 3mm, Dual-Pane	Advanced LowE IG	0.28 – 0.33	0.29 – 0.33	0.55 – 0.62	54 – 57	—
	SunDefense™ Low-E IG	0.28 – 0.32	0.22 – 0.24	0.51 – 0.57	54 – 57	SC, S
	SunDefense+ Low-E IG	0.23 – 0.32	0.21 – 0.24	0.50 – 0.57	46 – 54	NC, SC, S
	AdvancedComfort Low-E IG	0.23 – 0.27	0.29 – 0.32	0.54 – 0.60	42 – 45	NC
	NaturalSun Low-E IG	0.29 – 0.34	0.55 – 0.61	0.63 – 0.70	53 – 57	CA
	NaturalSun+ Low-E IG	0.24 – 0.27	0.50 – 0.55	0.61 – 0.68	41 – 45	CA, N
Triple Pane: 1-1/8" glass thickness, 3mm	Advanced Low-E IG	0.18 – 0.22	0.27 – 0.30	0.49 – 0.54	65 – 69	CA, N, NC
	SunDefense Low-E IG	0.18 – 0.22	0.20 – 0.22	0.45 – 0.50	65 – 69	CA, N, NC, SC, S
	NaturalSun Low-E IG	0.18 – 0.22	0.45 – 0.49	0.55 – 0.61	65 – 68	CA, N

Sound Performance

Frame Size Tested	Type of Glazing		Without Grilles STC	Without Grilles OITC
47" x 59"	13/16" Overall Thickness Dual-Pane	3mm / 3mm	27	22
		4mm / 4mm	28	24
		5mm / 3mm	31	26
	1" Overall Thickness Dual-Pane	4mm / 6mm	34	28
		6mm / 6mm	31	26
	1" Overall Thickness Dual-Pane Sound Reduction Glass	4mm / 7mm PVB	34	29
	1-1/4" Overall Thickness Dual-Pane Sound Reduction Glass	6mm / 12mm PVB	38	34
	1" Overall Thickness Dual-Pane Impact Laminated Glass	11.7mm PVB / 5mm glass	36	32
		11.7mm SGP / 5mm glass	35	31
	1-1/4" Overall Thickness Dual-Pane Impact Laminated Glass	13.6mm SPG / 6mm glass	37	31
	1-3/8" Overall Thickness Triple-Pane Glazing	5mm / 5mm / 5mm	31	26

Code Approvals:
Interior Glazed - Hallmark Certified; **FPAS#:** Standard = FL 10354; Impact Resistant = FL 20349 **TDI#:** Standard = WIN-1574; Impact Resistant = WIN-478

See the Performance section earlier in this manual to learn more about performance standards and ratings.

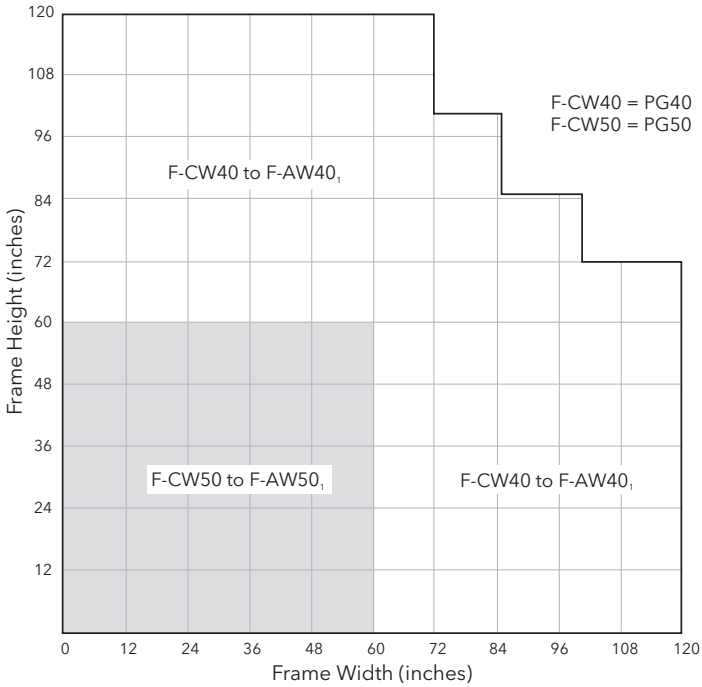

Fin Installation Method	Clip or Screw-through-Frame
F-CW40 to F-AW40	F-CW60 to F-AW60
F-CW50 to F-AW50	F-CW90 to F-AW90

Performance shown is for single units only and does not include Mitered Corner windows.
See online ADM or contact your local Pella sales representative for size and performance limitations of Mitered Corner windows.

Maximum performance when glazed with the appropriate glass thickness and using the correct installation method.

Keep special size frame dimensions to the nearest 1/8" increment.

(1) AAMA / WDMA F-AW rating can be obtained with the EnduraClad Plus protective finish with 70% fluoropolymer resin in a multi-step finish.

Pella® Reserve™ Traditional

Fixed Frame Direct Set Shapes

Shapes and Sizes – Interior Glazed

Description	Width		Height		Max. Glass Ft²
	Min.	Max.	Min.	Max.	
Rectangle	8"	144"	8"	144"	76
Half Circle	24"	120"	—	—	48
Quarter Circle	12"	85"	—	—	48
Full Springline	24"	108"	R + 4.25"	120"	48
Half Springline	12"	85"	R + 4.25"	120"	48
Full Chord	24"	120"	10.5"	(W ÷ 2) - 1"	48
Partial Chord	9"	120"	10.5"	85.125"	48
Full Elliptical	32.5"	120"	R1+1.25"	<W ÷ 2"	48
Partial Elliptical	14"	120"	R1+1.25"	60"	48
Full Arch Head	9"	120"	9"	120"	48
Partial Arch Head	9"	120"	9"	120"	48
Gothic Springline	9"	108"	14"	120"	48
Full Circle	24"	72"	—	—	—
Oval	Standard sizes only. 24" W x 36" H, 30" W x 48" H or 36" W x 60" H				

Rectangular and Angled Shapes

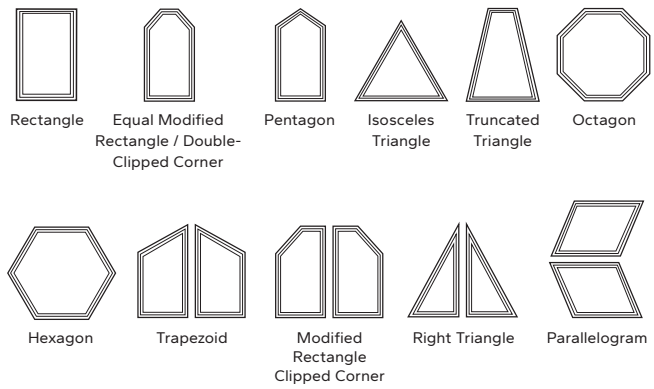

Curved Shapes

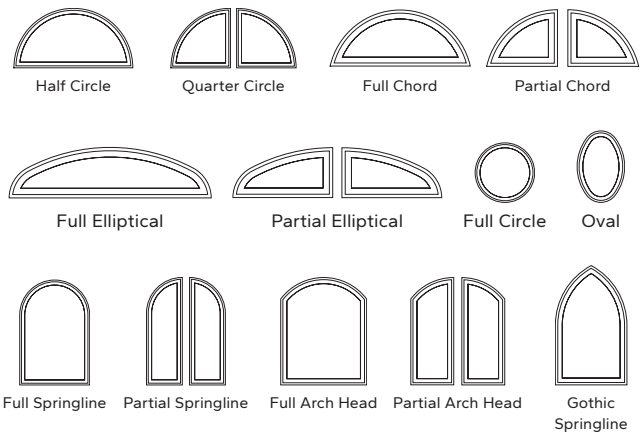

H=Height; S=Short Side; R=Radius, Angled and Curved frames are measured as a rectangle.

Pella angled and rectangular fixed frame direct set windows are available in custom shapes above. Not all options are shown. These windows may be installed in any orientation. For specifications, size limitations, and details on these units, contact your local Pella sales representative.

Pella® Reserve™ Traditional

Double-Hung

Photograph(s):
© David Sundberg / Esto

Air, Water, & Structural Performance

Performance Class & Grade Rating	Water Penetration Resistance	Air Infiltration	Design Pressure	Forced Entry
H-CW30 - CW50	4.6 – 7.5 psf	0.11	30 – 50 psf	10

Thermal Performance

Clad Vent Units

11/16" glass thickness, 2.5 and 3mm, Dual-Pane

Type of Glazing (Argon fill)	U–Factor	SHGC	VLT %	CR	Energy Star® Capable
Advanced Low–E IG	0.29 – 0.33	0.25 – 0.28	0.46 – 0.53	55 – 60	—
SunDefense™ Low–E IG	0.28 – 0.33	0.19 – 0.21	0.43 – 0.49	55 – 60	SC, S
SunDefense+ Low–E IG	0.25 – 0.28	0.18 – 0.21	0.42 – 0.48	43 – 49	NC, SC, S
AdvancedComfort Low–E IG	0.25 – 0.28	0.25 – 0.28	0.45 – 0.52	43 – 48	NC
NaturalSun Low–E IG	0.30 – 0.34	0.46 – 0.52	0.52 – 0.60	55 – 59	—
NaturalSun+ Low–E IG	0.26 – 0.29	0.42 – 0.48	0.51 – 0.58	42 – 47	CA, N

Sound Performance

Frame Size Tested	Type of Glazing		Without Grilles STC	Without Grilles OITC
Vent; 45" x 65"	11/16" Overall glazing thickness	2.5mm / 2.5mm glass	28	24
		5mm / 3mm glass	31	27

Code Approvals: Hallmark Certified; **FPAS#:** 20675; **TDI#:**Win-2174

See the Performance section to learn more about performance standards and ratings. Performance varies based on actual product attributes.

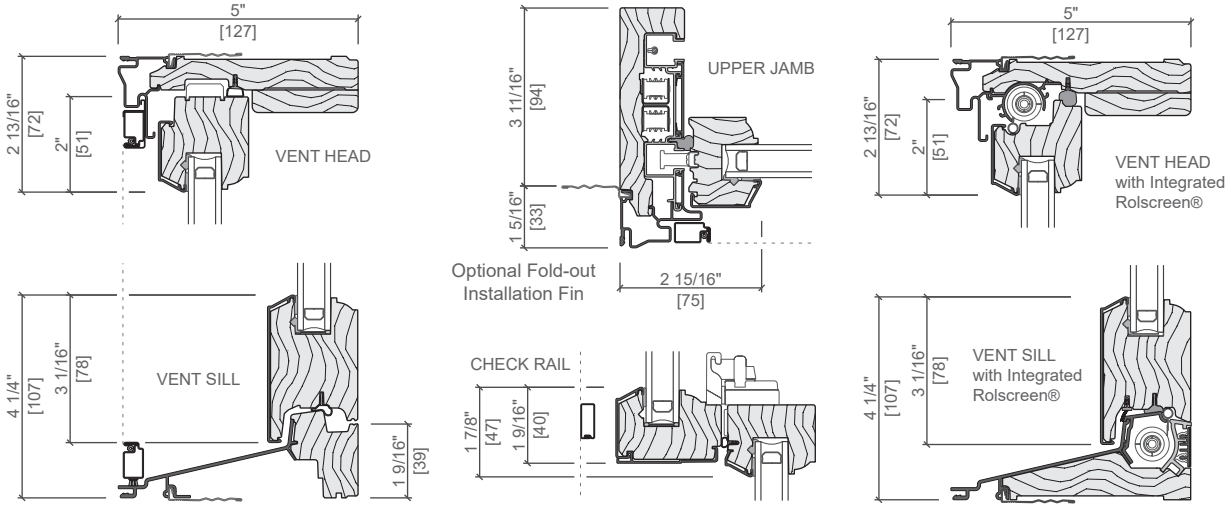

Other frame types are available. Not to scale. All dimensions are approximate.

Standard Sizes

	(552) (533)	(654) (635)	(756) (737)	(857) (838)	(959) (940)	(1 060) (1 041)	(1 162) (1 143)	(1 238) (1 219)
Opening	1' 9 3/4"	2' 1 3/4"	2' 5 3/4"	2' 9 3/4"	3' 1 3/4"	3' 5 3/4"	3' 9 3/4"	4' 0 3/4"
Frame	1' 9"	2' 1"	2' 5"	2' 9"	3' 1"	3' 5"	3' 9"	4' 0"
(908) (889) 2' 11 3/4"	2' 11"	2135	2535	2935	3335	3735	4135	4535	4835
(1 060) (1 041) 3' 5 3/4"	3' 5"	2141	2541	2941	3341	3741	4141	4541	4841
(1 213) (1 194) 3' 11 3/4"	3' 11"	2147	2547	2947	3347	3747	4147	4547	4847
(1 365) (1 346) 4' 5 3/4"	4' 5"	2153	2553	2953	3353	3753	4153	4553	4853
(1 467) (1 448) 4' 9 3/4"	4' 9"	2157	2557	2957	3357	3757 E1	4157 E	4557 E	4857 E
(1 518) (1 499) 4' 11 3/4"	4' 11"	2159	2559	2959	3359 E1	3759 E	4159 E	4559 E	4859 E
(1 670) (1 651) 5' 5 3/4"	5' 5"	2165	2565	2965	3365 E	3765 E	4165 E	4565 E	4865 E
(1 822) (1 803) 5' 11 3/4"	5' 11"	2171	2571	2971 E1	3371 E	3771 E	4171 E	4571 E	4871 E
(1 975) (1 956) 6' 5 3/4"	6' 5"	2177	2577 E1	2977 E	3377 E	3777 E	4177 E	4577 E	4877 E
(2 153) (2 134) 7' 0 3/4"	7' 0"	2184	2584 E1	2984 E	3384 E	3784 E	4184 E	4584 E	4884 E

Special Sizes

Special sizes are available in 1/8" increments.

Vent–Equal

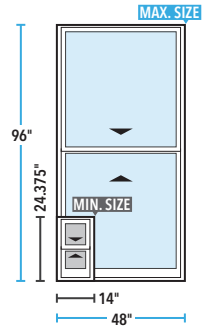

Cottage and custom sash split also available. Specify checkrail height when ordering.

Transoms and Companion fixed windows available for combinations. See Casement window offering for matching glass sightlines, or see the Fixed Frame Direct Set offering.

Integrated Rolscreen® only available on sizes ≥ 21" wide and ≥ 34" tall, and ≤ 48" wide and ≤ 84" tall.

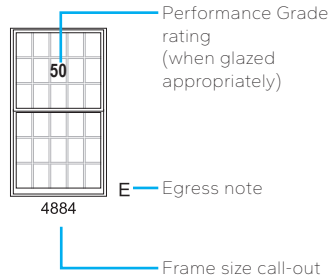

Impact-Resistant laminated glazing with higher design pressure ratings available.

Performance for wood exterior units may vary from what is shown.

Egress Notes:

E = Window meets minimum clear opening of 24" height, 20" width, and 5.7 sq. ft.

E1 = Window meets minimum clear opening of 24" height, 20" width, and 5.0 sq. ft.

Check all applicable local codes for emergency egress requirements.

Not to scale.

Traditional grille patterns shown.

Pella® Reserve™ Traditional

Precision-Fit Double-Hung

Air, Water, & Structural Performance	Performance Class & Grade Rating	Water Penetration Resistance	Air Infiltration	Design Pressure	Forced Entry
	H-CW40 – CW50	6.0 – 6.9 psf	.11	40 – 50 psf	10

Thermal Performance Clad Vent Units 11/16" glass thickness, 2.5 and 3mm, Dual-Pane	Type of Glazing (Argon fill)	U–Factor	SHGC	VLT %	CR	Energy Star® Capable
	Advanced Low–E IG	0.29 – 0.34	0.26 – 0.29	0.47 – 0.54	54 – 59	—
	SunDefense™ Low–E IG	0.29 – 0.33	0.19 – 0.21	0.43 – 0.50	55 – 59	S
	SunDefense+ Low–E IG	0.25 – 0.29	0.19 – 0.21	0.43 – 0.48	43 – 48	NC, SC,S
	AdvancedComfort Low–E IG	0.25 – 0.26	0.25 – 0.28	0.46 – 0.52	43 – 48	NC
	NaturalSun Low–E IG	0.30 – 0.34	0.47 – 0.53	0.53 – 0.60	53 – 61	—
	NaturalSun+ Low–E IG	0.26 – 0.29	0.42 – 0.49	0.52 – 0.59	42 – 47	CA, N

Code Approvals: Hallmark Certified; **FPAS#:** Vent=FL 14343; Fixed= FL 14129 **TDI#:** Vent=WIN-1089; Fixed= WIN-1392

See the Performance section to learn more about performance standards and ratings. Performance varies based on actual product attributes.

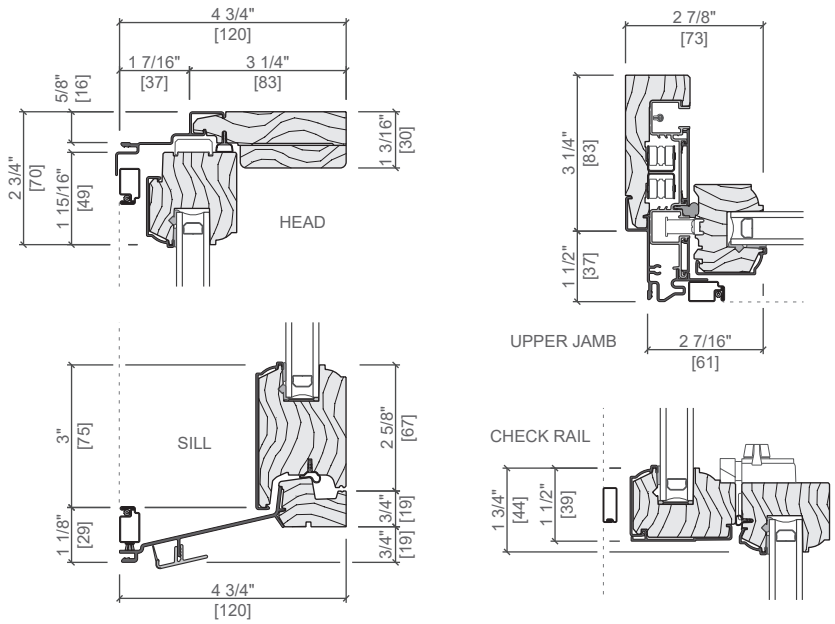

Not to scale. All dimensions are approximate.

Make Sizes

Sizes are available in 1/4" increments.

Vent–Equal

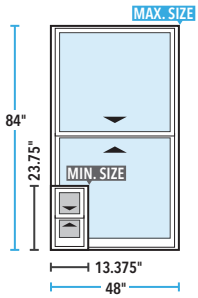

Cottage and custom sash splits also available.

Cottage Sash windows must be between
≥ 40-1/2" and ≤ 71-1/2" make height.

Consult with your local Pella sales representative or see the online ADM for egress information.

Check all applicable local codes for emergency egress requirements.

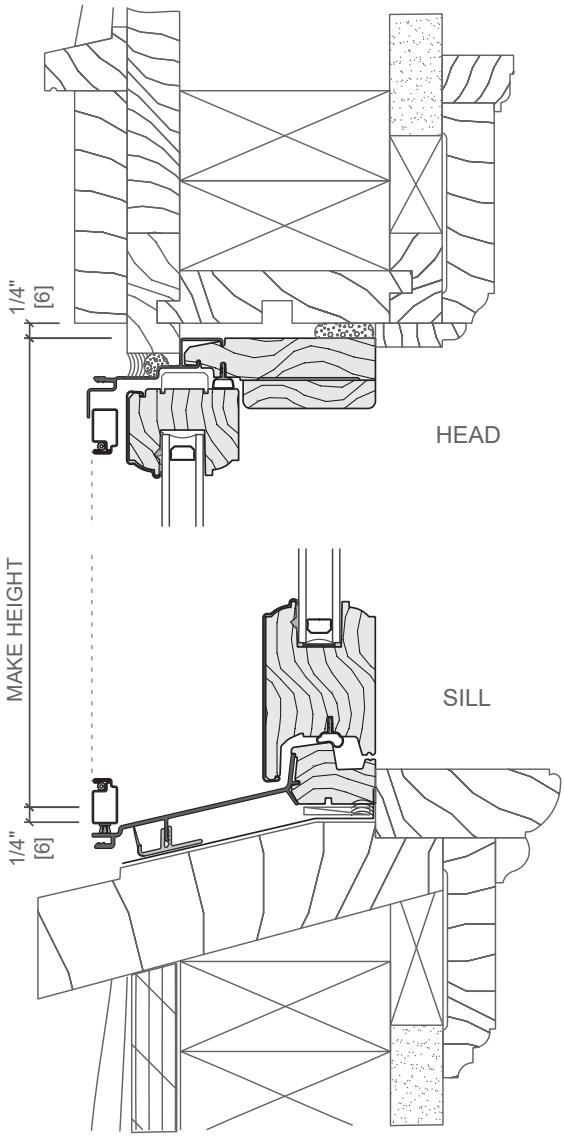

Make Width = Opening width - 1/2" (rounded to the nearest 1/4")
Make Height = Opening width - 1/2" (rounded to the nearest 1/4")

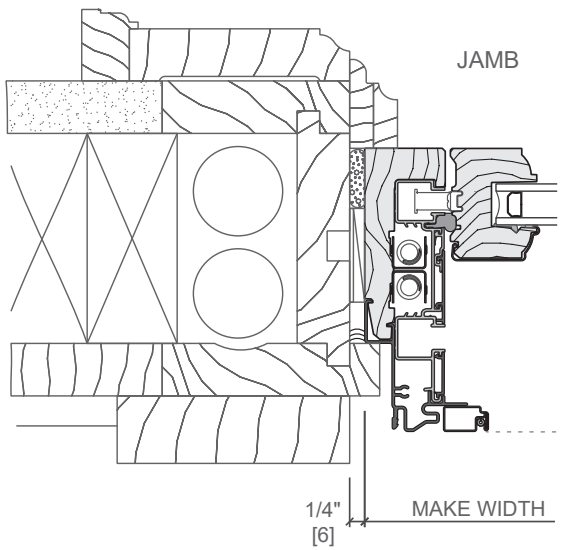

NOTE:

Wall construction and old Double-Hung frame shown are existing; old Double-Hung sash has been removed.

Refer to the appropriate Pella installation instruction for complete step-by-step instructions.

Shim and plumb units as required.

Seal unit to exterior / blind stop.

Seal the unit to existing stool and window sill.

Level units as required.

Insulate all voids at window perimeter (by others).

Seal unit to exterior / blind stop.

Precision-Fit windows are intended for pocket installation into an existing old window frame still in place. The existing sashes of the old double- or single-hung window are removed by cutting the balance chords and removing the interior stop and parting stops. The new window is placed against the exterior stop from the interior. The interior stops can then be re-installed.

See installation instructions for details

For masonry installation, see the standard Double-Hung product section.

Pella® Reserve™ Traditional

Monumental Hung

Photograph(s):
© Jason Risner Photography

Air, Water, & Structural Performance

Performance Class & Grade Rating	Water Penetration Resistance	Air Infiltration	Design Pressure	Forced Entry
H-LC25 – CW50	3.76 – 7.52 psf	0.11	25 – 50 psf	10

Thermal Performance

Clad Vent Units

13/16" glass thickness, 3mm, Dual-Pane

Triple-Pane also available.

Type of Glazing (Argon fill)	U–Factor	SHGC	VLT %	CR	Energy Star® Capable
Advanced Low–E IG	0.28 – 0.32	0.23 – 0.26	0.42 – 0.48	56 – 59	SC, S
SunDefense™ Low–E IG	0.28 – 0.32	0.17 – 0.19	0.39 – 0.44	56 – 60	SC, S
SunDefense+ Low–E IG	0.24 - 0.27	0.17 – 0.19	0.38 – 0.43	45 - 49	NC, SC, S
AdvancedComfort Low–E IG	0.25 – 0.28	0.22 – 0.25	0.41 – 0.47	44 – 48	SC, S
NaturalSun Low–E IG	0.29 – 0.33	0.42 – 0.47	0.48 – 0.54	55 – 59	—
NaturalSun+ Low–E IG	0.25 – 0.28	0.38 - 0.43	0.47 – 0.53	38 - 47	N, NC

Sound Performance

Frame Size Tested	Type of Glazing		Without Grilles STC	Without Grilles OITC
Vent; 48" x 60"	13/16" Overall thickness	3mm / 3mm glass	29	24
		5mm / 3mm glass	32	27
		3mm / 7.6mm PVB glass	33	29
		3mm / 6mm Laminated glass	33	28
	1-1/16" Overall	2.5mm / 3mm / 2.5mm glass	29	24

Code Approvals: Hallmark Certified, **FPAS#:** ≤ 54" x 96"=FL 17769

See the Performance section to learn more about performance standards and ratings. Performance varies based on actual product attributes.

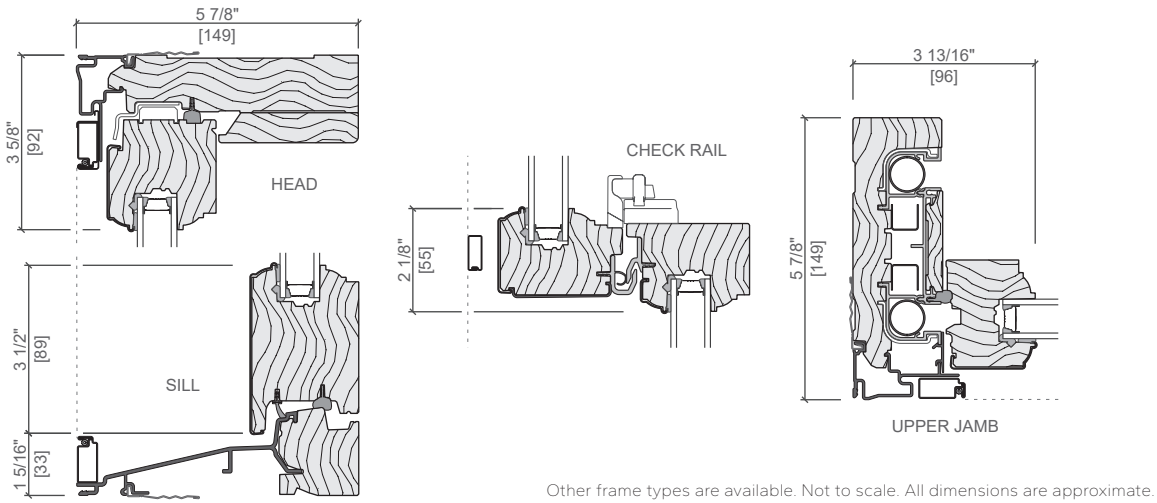

Other frame types are available. Not to scale. All dimensions are approximate.

Available Sizes

Sizes are available in 1/8" increments.

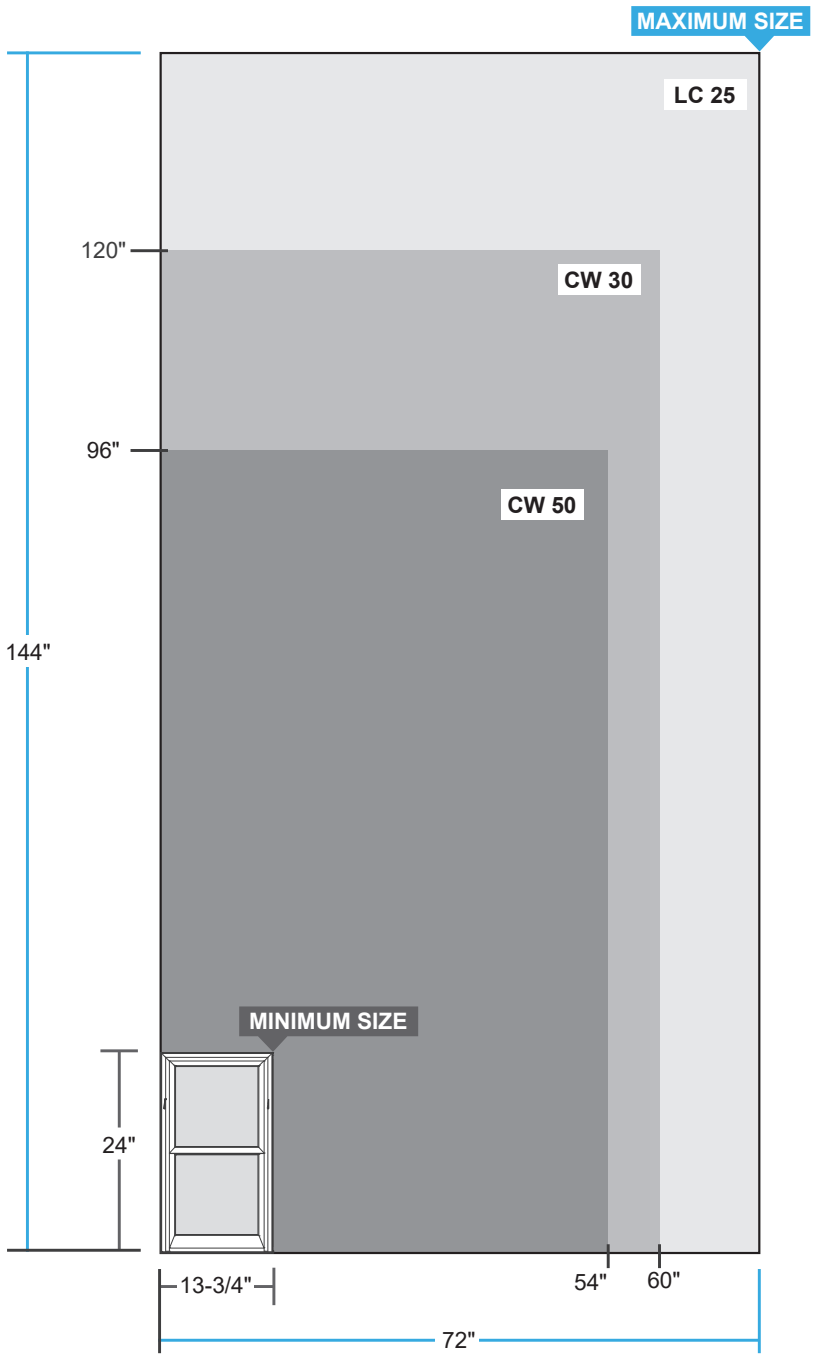

Cottage and custom sash split also available. Specify checkrail height when ordering.

Transoms and Companion fixed windows available for combinations. See Casement window offering for matching glass sightlines, or see the Fixed Frame Direct Set offering.

Impact-Resistant laminated glazing with higher design pressure ratings available.

Performance for wood exterior units may vary from what is shown.

Maximum performance when glazed with the appropriate glass.

See online ADM documentation or consult with your local Pella sales representative for all glazing and size restrictions that may affect clear opening (egress).

Pella® Reserve™ Traditional

In-Swing Door

Air, Water, & Structural Performance

Door Height	Performance Class & Grade Rating	Water Penetration Resistance	Air Infiltration	Design Pressure	Forced Entry
≤ 8'	LC55	8.36 psf	0.15	55 psf	Complies with AAMA 1304
> 8'	LC40	7.52 psf	0.15	40 psf	

Thermal Performance

Clad Vent Units

13/16" glass thickness, 3mm, Dual-Pane

Triple-Pane also available.

Type of Glazing (Argon fill)	U–Factor	SHGC	VLT %	CR	Energy Star® Capable
Advanced Low–E IG	0.28 – 0.31	0.19 – 0.22	0.33 – 0.39	58 – 62	SC, S
SunDefense™ Low–E IG	0.28 – 0.31	0.14 – 0.17	0.31 – 0.36	59 – 62	SC, S
SunDefense+ Low–E IG	0.24 - 0.27	0.14 – 0.16	0.30 – 0.35	45 - 48	N, NC, SC, S
AdvancedComfort Low–E IG	0.25 – 0.27	0.19 – 0.21	0.33 – 0.38	45 – 49	N, NC, SC, S
NaturalSun Low–E IG	0.29 – 0.32	0.34 – 0.40	0.38 – 0.44	58 – 61	—
NaturalSun+ Low–E IG	0.25 – 0.27	0.31 – 0.36	0.37 – 0.43	44 - 47	N, NC

Sound Performance

Frame Size Tested	Type of Glazing		Without Grilles STC	Without Grilles OITC
71-1/4" x 81-1/2"	13/16" Overall thickness	3mm / 3mm glass	31	25

Code Approvals: Hallmark Certified; **FPAS#:** FL 14293; **TDI#:** DR-635

See the Performance section to learn more about performance standards and ratings. Performance varies based on actual product attributes.

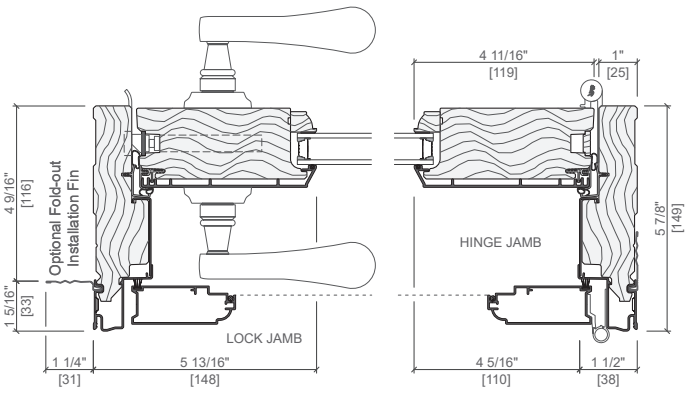

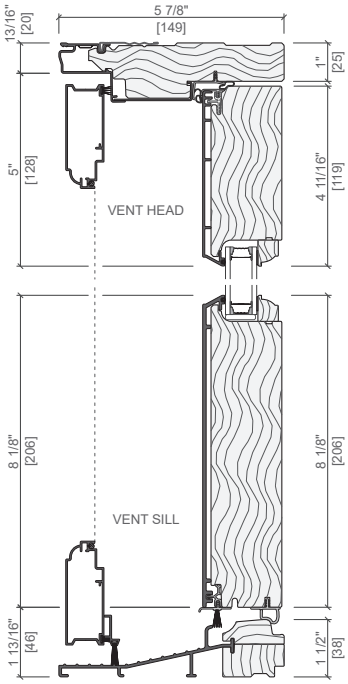

Other frame types are available. Low Profile sill option available. Water resistance is 0 psf for low profile sill. Not to scale. All dimensions are approximate.

Standard Sizes

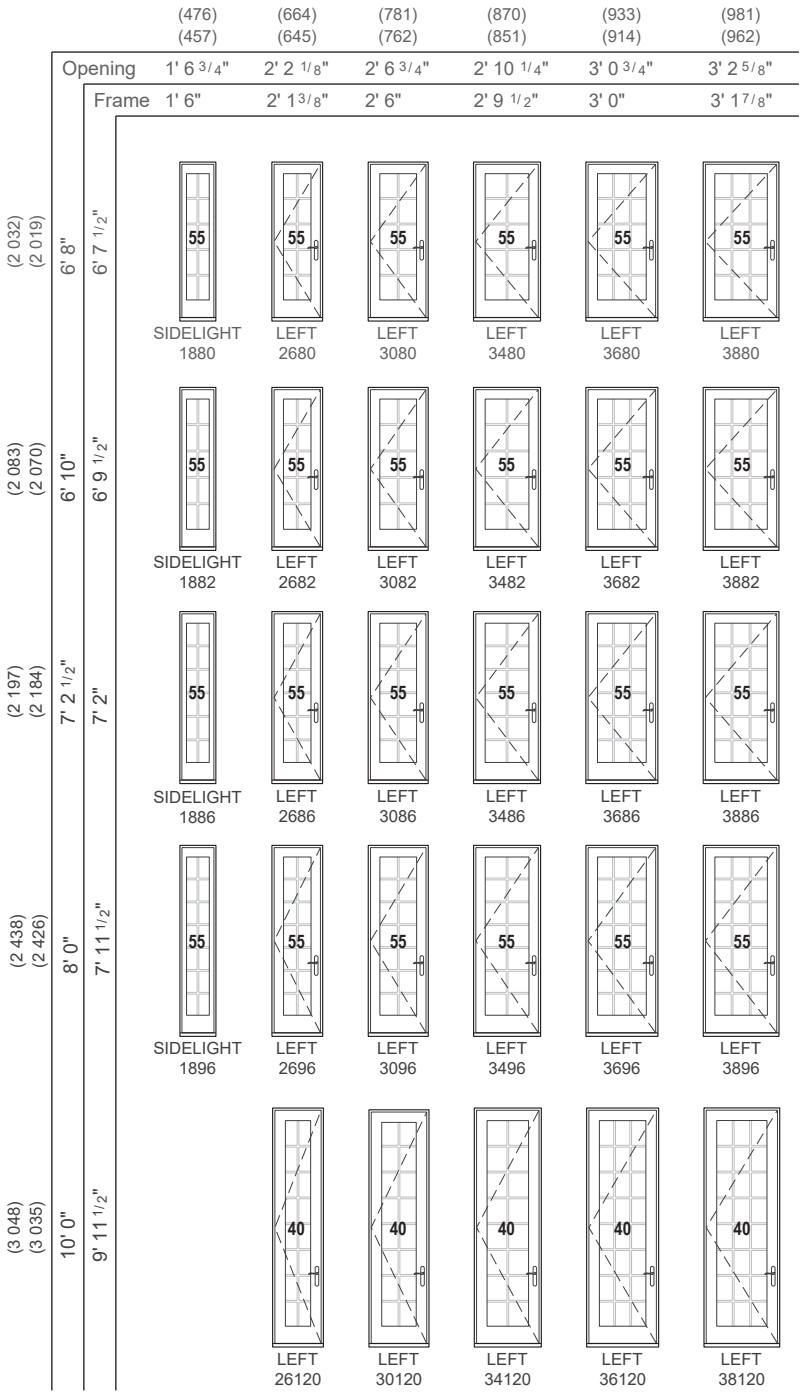

Not to scale.

Traditional grille patterns shown.

Left-hand doors shown, right-hand and fixed also available.

Special Sizes

Special sizes are available in 1/8" increments.

Single Door (L/R)

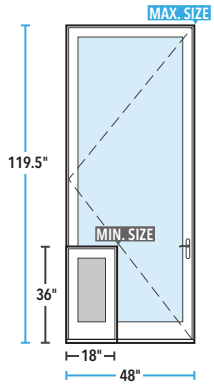

Double-Door (AP/PA)

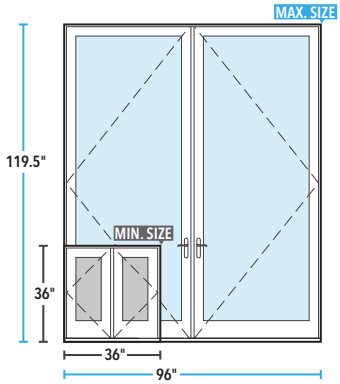

Double-Door (AF/FA)

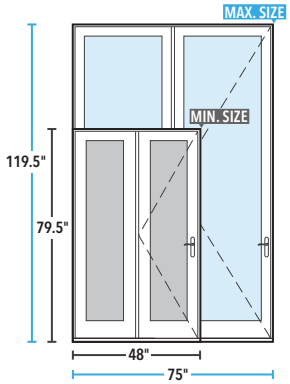

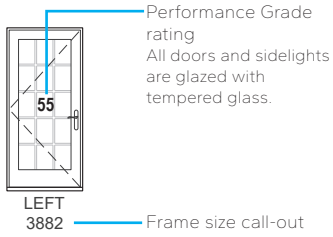

Impact-Resistant laminated glazing with higher design pressure ratings available.

Performance for wood exterior units may vary from what is shown.

Fixed Casement Transoms with wide stiles for matching glass sightlines and companion fixed frame direct set windows available for transom combinations. See the online ADM or consult your local Pella sales representative for details.

Pella® Reserve™ Traditional

Out-Swing Door

Air, Water, & Structural Performance

Door Height	Performance Class & Grade Rating	Water Penetration Resistance	Air Infiltration	Design Pressure	Forced Entry
≤ 8'	LC70	10.66 psf	0.15	70 psf	Complies with AAMA 1304
> 8'	LC50	7.52 psf	0.15	50 psf	

Thermal Performance

Clad Vent Units

13/16" glass thickness, 3mm, Dual-Pane

Triple-Pane also available.

Type of Glazing (Argon fill)	U–Factor	SHGC	VLT %	CR	Energy Star® Capable
Advanced Low–E IG	0.28 – 0.31	0.19 – 0.22	0.33 – 0.39	57 – 61	SC, S
SunDefense™ Low–E IG	0.27 – 0.30	0.14 – 0.16	0.31 – 0.36	58 – 61	SC, S
SunDefense+ Low–E IG	–	–	–	–	PENDING
AdvancedComfort Low–E IG	0.24 – 0.27	0.18 – 0.21	0.33 – 0.38	45 – 48	N, NC, SC ,S
NaturalSun Low–E IG	0.28 – 0.31	0.34 – 0.39	0.38 – 0.44	57 – 60	—
NaturalSun+ Low–E IG	–	–	–	–	PENDING

Sound Performance

Frame Size Tested	Type of Glazing		Without Grilles	
			STC	OITC
71-1/4" x 81-1/2"	13/16" Overall thickness	3mm / 3mm glass	30	25

Code Approvals: Hallmark Certified; **FPAS#:** FL 14302; **TDI#:** DR-548

See the Performance section to learn more about performance standards and ratings. Performance varies based on actual product attributes.

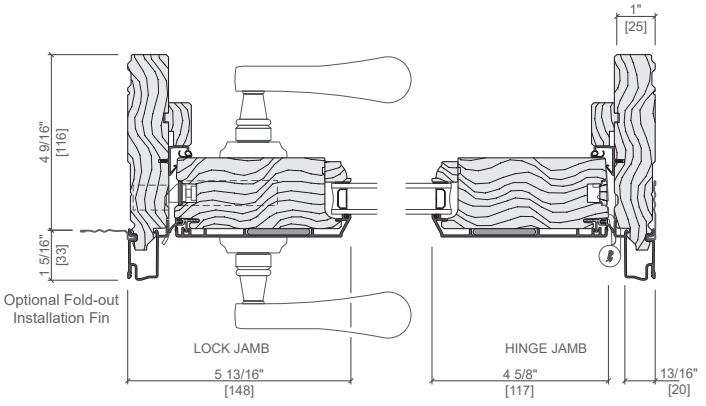

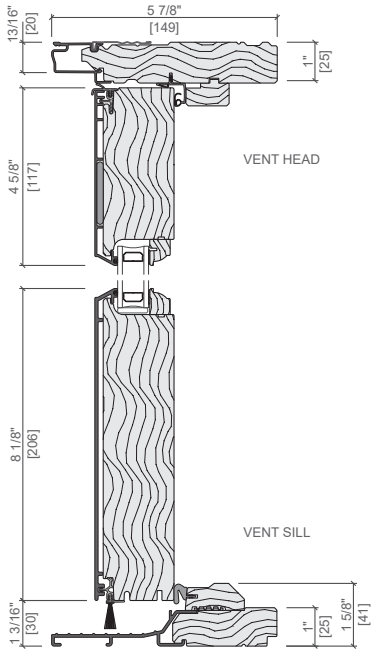

Other frame types are available. Low Profile sill option available. Water resistance is 0 psf for low profile sill. Not to scale. All dimensions are approximate.

Standard Sizes

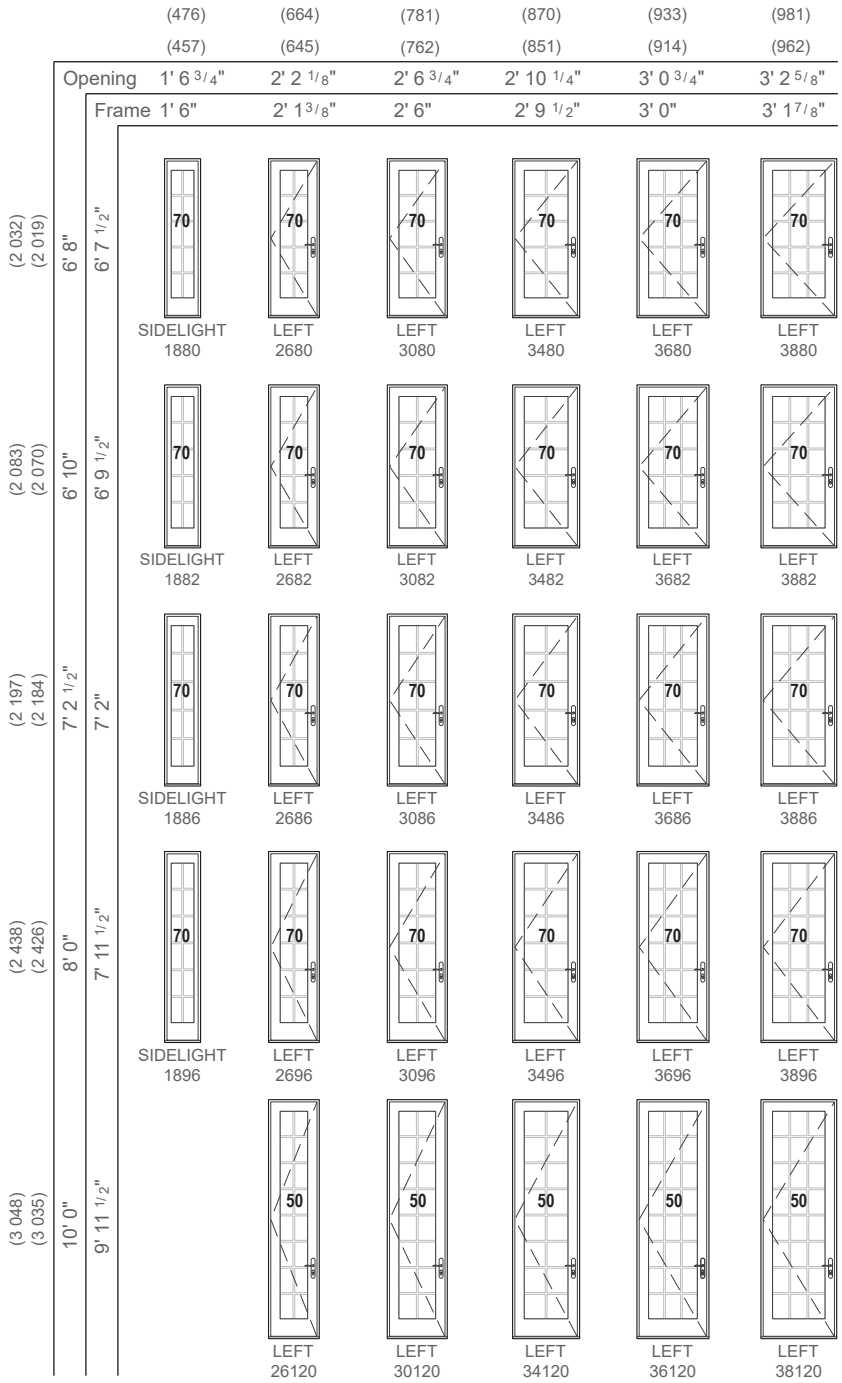

Special Sizes

Special sizes are available in 1/8" increments.

Single Door (L/R)

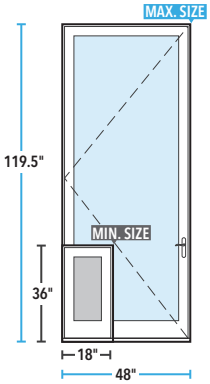

Double-Door (AP/PA)

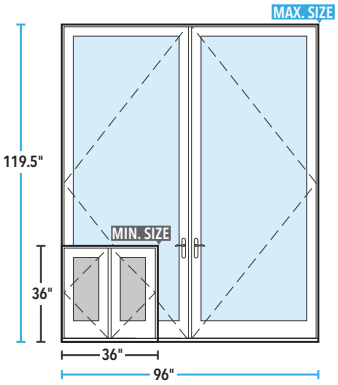

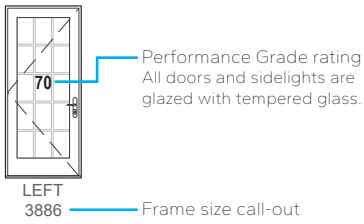

Impact-Resistant laminated glazing with higher design pressure ratings available.

Performance for wood exterior units may vary from what is shown.

Fixed Casement Transoms with wide stiles for matching glass sightlines and companion fixed frame direct set windows available for transom combinations. See the online ADM or consult your local Pella sales representative for details.

Not to scale.

Traditional grille patterns shown.

Left-hand doors shown, right-hand and fixed also available.

Pella® Reserve™ Traditional

Commercial Out-Swing Door

Photograph(s):
© Coseta Photography, Inc.

Thermal Performance

Clad Vent Units

13/16" glass thickness, 3mm, Dual-Pane;

Triple-Pane also available.

Type of Glazing (Argon fill)	U–Factor	SHGC	VLT %	CR	Energy Star® Capable
Advanced Low–E IG	0.30 – 0.31	0.15 – 0.18	0.26 – 0.31	61	—
SunDefense™ Low–E IG	0.30 – 0.31	0.12 – 0.13	0.24 – 0.29	61	—
AdvancedComfort Low–E IG	0.28	0.15 – 0.17	0.26 – 0.31	49	—
NaturalSun Low–E IG	0.31 – 0.32	0.27 – 0.32	0.30 – 0.36	61	—

See the Performance section earlier in this manual to learn more about performance standards and ratings.
Performance varies based on actual product attributes. Validation is required. Contact your local Pella sales representative or Pella Architectural Solutions for details.

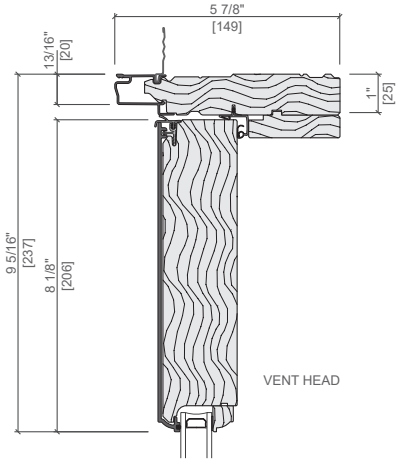

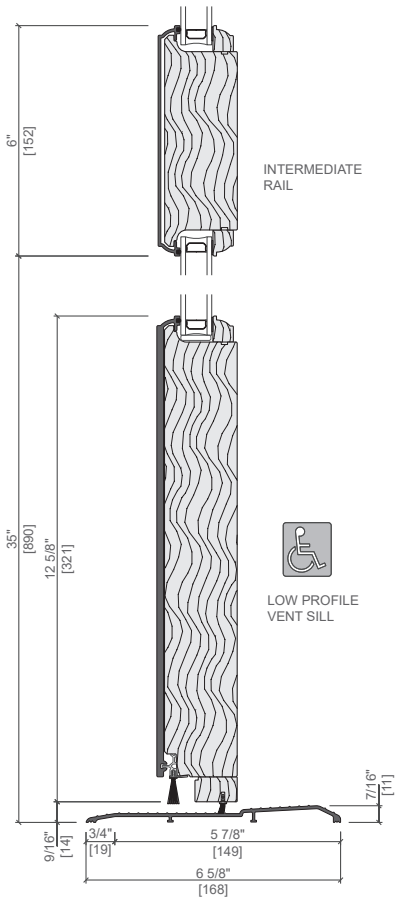

Other frame types are available.
(*) Low Profile sill is standard. Water resistance is 0 psf for low profile sill.
Not to scale. All dimensions are approximate.

Standard Sizes

7' 2" and 8' 0" Vent and Fixed Units - Clad
(Shown with Optional Intermediate Rail)

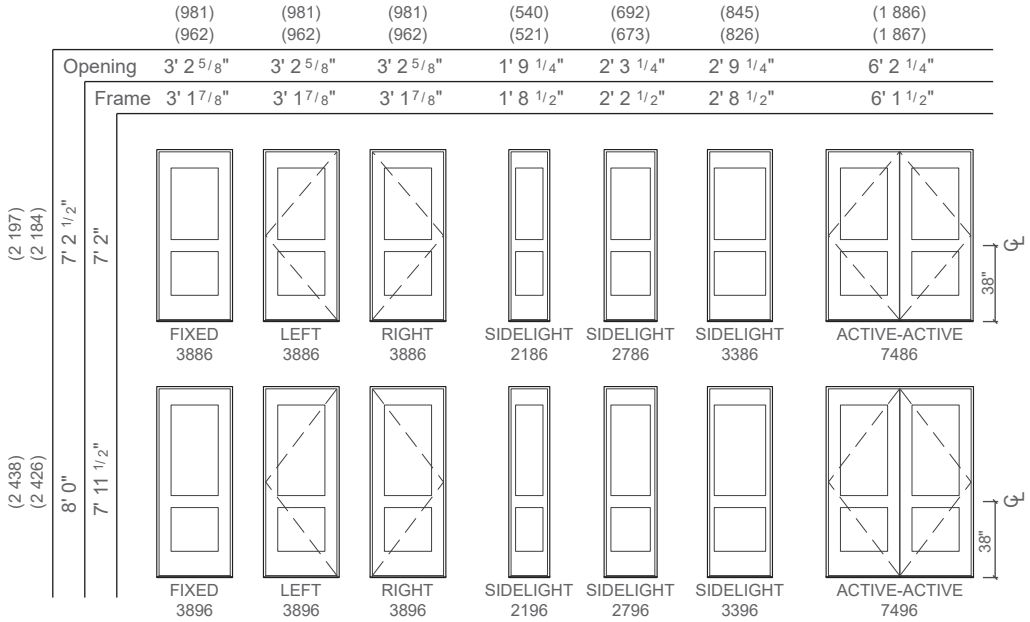

Not to scale.

CL = Distance from bottom of door to center line of intermediate rail is 38".

Masonry dimensions are with Pella's 1-7/8" brickmould.

To determine masonry openings when using Pella's 3-1/2" brickmould, add an additional 3-1/4" to width and 1-5/8" to height.

All doors are glazed with 3mm tempered glass standard.

Special Sizes

Special sizes are available in 1/8" increments.

Sizes larger or smaller than shown here require validation.

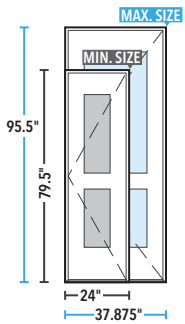

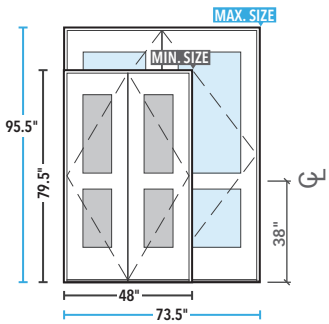

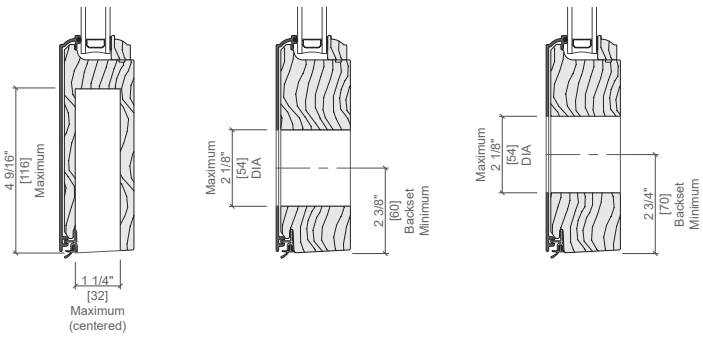

Pella Reserve Commercial Out-Swing Doors are not supplied with locking hardware, closers, panic hardware, push plates or kick plates. Use the following guidelines when selecting these hardware items from your hardware supplier.

Mortise Locks: Maximum mortise rout dimensions are shown above for commercial doors with standard stile dimensions. Maximum height of the mortise rout is 10 inches. Routs should be sealed before the locks are installed for added moisture protection.

Cylinder Locks: Maximum diameter of cylinder lock bore is 2-1/8". Minimum backset is 2-3/8"; maximum backset is 2-3/4".

Door Closers: Pella recommends surface mounted door closers anchored into a structural header or minimum 1.5" Pella wood spread mullion. Concealed closers that are routed into the top of the door panel are not recommended.

Exit Devices: Concealed vertical rod hardware is not recommended. Use surface mounted vertical rod hardware.

Kick Plates and Push Plates: In commercial applications, Pella recommends the use of kick plates and push plates to protect the wood veneer.

Hinges: Durable ball bearing hinges standard, optional adjustable hinges for ease of installation.

Pella® Reserve™ Traditional

Sliding Door

Air, Water, & Structural Performance

Performance Class & Grade Rating	Water Penetration Resistance	Air Infiltration	Design Pressure	Forced Entry
SD-LC30 - LC70	4.59 – 10.65 psf	0.10	30 – 70 psf	40

Thermal Performance

Clad Vent Units

13/16" glass thickness; 3mm, Dual-Pane

Triple-Pane also available.

Type of Glazing (Argon fill)	U–Factor	SHGC	VLT %	CR	Energy Star® Capable
Advanced Low–E IG	0.29 – 0.32	0.20 – 0.23	0.37 – 0.43	54 – 56	—
SunDefense™ Low–E IG	0.28 – 0.32	0.15 – 0.17	0.34 – 0.39	54 – 57	N, NC, SC, S
SunDefense+ Low–E IG	0.25 – 0.28	0.15 – 0.17	0.33 – 0.38	43 – 46	N, NC, SC, S
AdvancedComfort Low–E IG	0.25 – 0.28	0.20 – 0.23	0.36 – 0.42	43 – 46	N, NC, SC, S
NaturalSun Low–E IG	0.29 – 0.33	0.37 – 0.42	0.41 – 0.48	53 – 56	—
NaturalSun+ Low–E IG	0.26 – 0.28	0.33 – 0.39	0.40 – 0.47	38 – 45	N, NC

Sound Performance

Frame Size Tested	Type of Glazing		STC	OITC
Fixed-Vent; 71-1/4" x 81-1/2" No grilles	13/16" overall thickness	3mm / 3mm glass	31	25
		5mm / 7.6mm PVB	35	30
		4mm / 6mm glass	34	30
	7/8" overall thickness	8.6mm PVB / 5mm glass	34	30

Code Approvals: Hallmark Certified; **FPAS#:** FL 12459

See the Performance section earlier in this manual to learn more about performance standards and ratings. Performance varies based on actual product attributes.

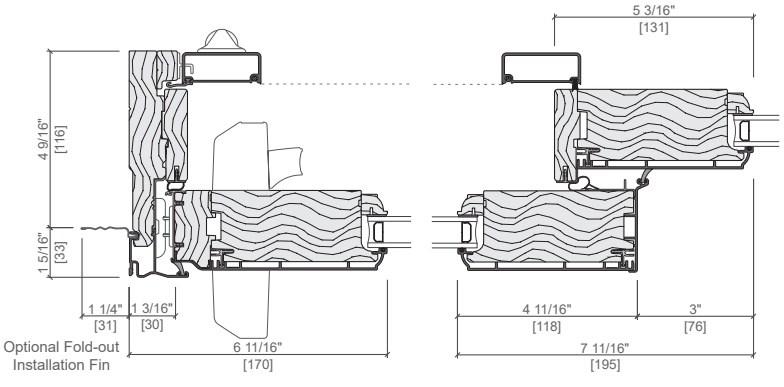

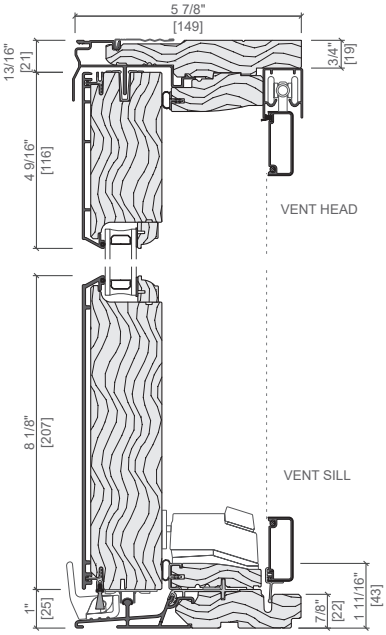

Other frame types are available.
Not to scale. All dimensions are approximate.

Standard Sizes

Opening	5' 0" (1 524)	6' 0" (1 829)	7' 0" (2 134)	8' 0" (2 438)	10' 0" (3 048)
Frame	4' 11 1/4" (1 505)	5' 11 1/4" (1 810)	6' 11 1/4" (2 115)	7' 11 1/4" (2 419)	9' 11 1/4" (3 029)
6' 8" (2 032) / 6' 7 1/2" (2 019)	65 — 6080	65 — 7280	60 — 8480	60 — 9680	30 — 12080
6' 10" (2 083) / 6' 9 1/2" (2 070)	65 — 6082	65 — 7282	60 — 8482	60 — 9682	30 — 12082
8' 0" (2 438) / 7' 11 1/2" (2 426)	65 — 6096	65 — 7296	60 — 8496	60 — 9696	30 — 12096
9' 0" (2 743) / 8' 11 1/2" (2 731)	30 — 60108	30 — 72108	30 — 84108	30 — 96108	30 — 120108
10' 0" (3 048) / 9' 11 1/2" (3 035)	30 — 60120	30 — 72120	30 — 84120	30 — 96120	30 — 120120

Two panel doors—Fixed-Vent (OX), right panel opens, left panel is fixed. Units open in the direction of the arrow as viewed from the exterior.

Vent-Fixed (XO) doors are also available.

Fixed (O), Three-Panel (OXO), and-Four Panel (OXXO) are also available in standard sizes, matching the standard heights shown in this size table.

Three-Panel, Fixed-Vent-Fixed (OXO) combination doors also available as OOX and XOO combinations.

Rolscreen available in OX, XO, OXO doors only.

Contact your local Pella sales representative for details and restrictions of knock down frames.

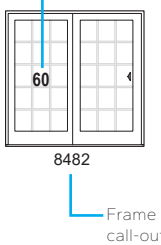

All doors are glazed with tempered glass.

Impact-Resistant glazing with higher design pressure ratings available for select sizes and configurations.

Performance for wood exterior units may vary from what is shown.

Special sizes are available in 1/8" increments.

Special Sizes

Vent (OX or XO)

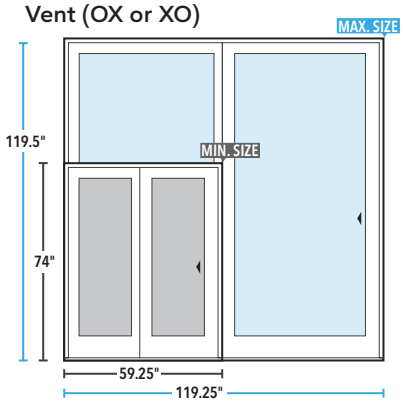

Vent (OXO)

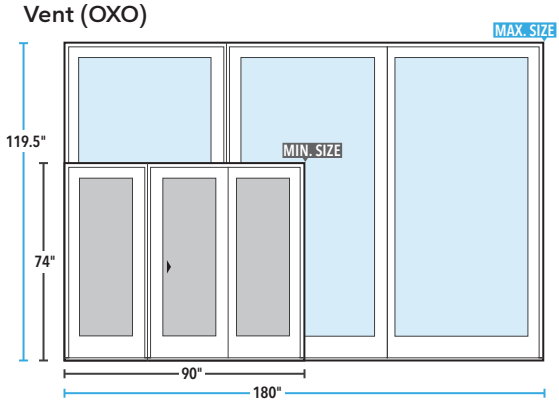

Fixed (O)

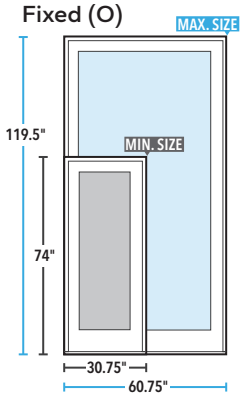

Vent (OXXO)

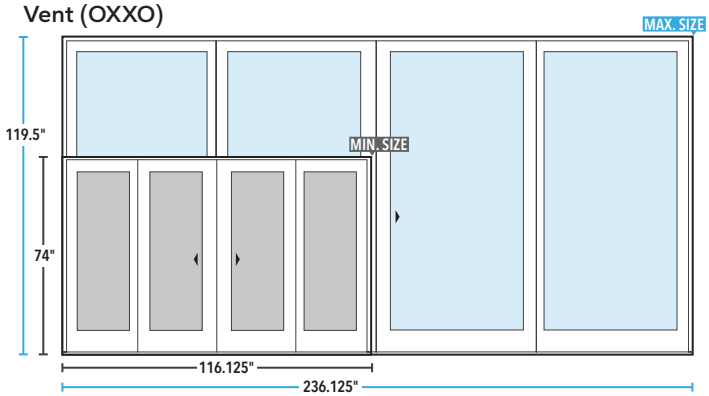

Fixed Casement Transoms with wide stiles for matching glass sightlines and companion fixed frame direct set windows available for transom combinations. See the online ADM or consult your local Pella sales representative for details.

Pella® Reserve™ Traditional

Multi-Panel Doors

Bifold Doors

Out-Swing Standard Sill

Air, Water, & Structural Performance

Performance Class & Grade Rating	Water Penetration Resistance	Air Infiltration	Design Pressure	Forced Entry
R15 - LC25	2.92 – 3.76 psf	0.15	15 – 25 psf	Complies with AAMA 1304

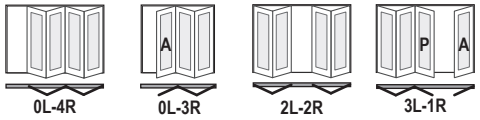

See online ADM for specific sizes by configuration and all available options.

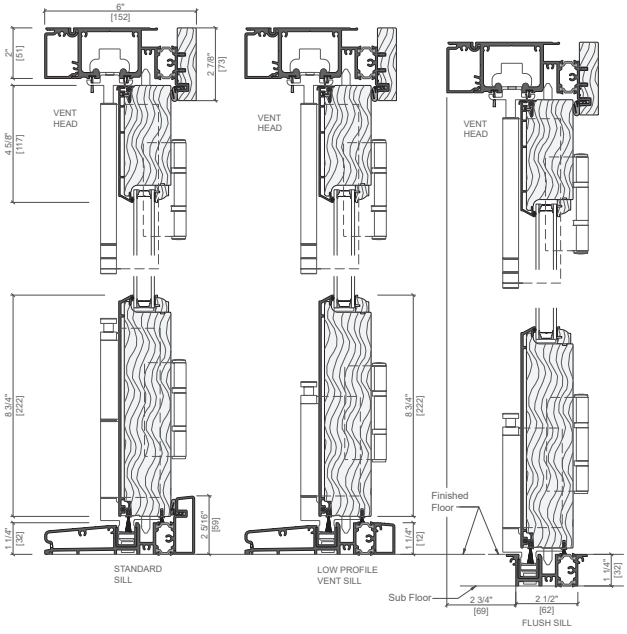

Size Dimensions (Out-Swing Bifold Doors)

Number of Panels	Frame Width (Inches)							
	One-Way (No-Passage-Door)		One-Way (Passage-Door)		Split (No-Passage-Door)		Split (Passage-Door)	
	Min	Max	Min	Max	Min	Max	Min	Max
2	32.125	87.5	—	—	—	—	—	—
3	—	—	46.625	129.75	—	—	47.375	130.5
4	61	171.875	—	—	61.25	172.125	61.875	172.75
5	—	—	75.5	214.125	—	—	76.25	214.875
6	89.875	256.25	—	—	90.125	256.5	90.75	257.125
7	—	—	104.375	298.5	—	—	105.125	299.25
8	118.75	340.625	—	—	119	340.875	119.625	341.5
9	—	—	133.25	382.875	—	—	134	383.625
10	147.625	425	—	—	147.875	425.25	148.5	425.875

View online documents for unit height details.

Minimum to maximum door width dimensions refers to frame to frame dimension. Values represent minimum and maximum values without consideration of panel configuration. Consult design data for specific values for your venting configuration.

Contact your local Pella sales representative for the most current options and configurations available.

Multi-slide Doors

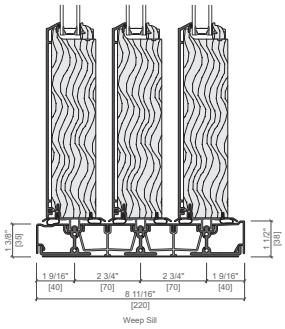

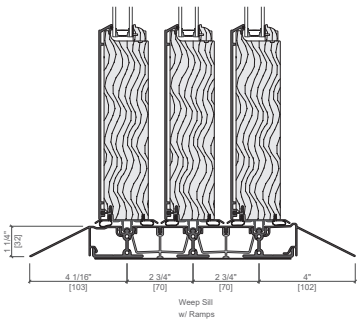

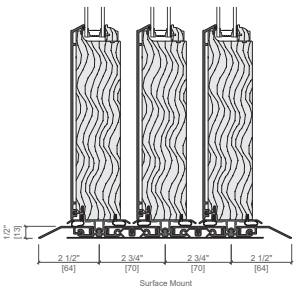

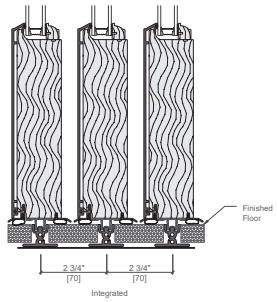

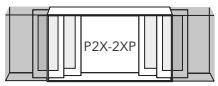

Stacking Panel Configurations

Number of Panels	Frame Width (Inches)			
	One-Way		Bi-Part	
	Min	Max	Min	Max
1	—	—	—	—
2	40.375	120.25	—	—
3	56.5	176.25	—	—
4	72.375	232.25	78.25	238.125
5	88.5	288.375	—	—
6	104.5	344.375	110.375	350.25
7	120.5	400.375	—	—
8	136.5	456.375	142.375	462.25
9	—	—	—	—
10	—	—	174.5	574.375

View online documents for unit height details.

Pocketing Panel Configurations

Number of Panels	Frame Width (Inches)			
	1 Pocket / One-Way		2 Pocket / Bi-Part	
	Min	Max	Min	Max
1	48.875	128.75	—	—
2	64	183.875	95.25	255.125
3	80	239.875	—	—
4	96	295.875	125.5	365.375
5	112.125	352	—	—
6	128.125	408	157.625	477.5
7	144.125	464	—	—
8	160.25	520	189.75	589.5
9	—	—	—	—
10	—	—	221.75	701.625

View online documents for unit height details.

X = Venting, O = Fixed. Custom sized panels in 1/8" increments. Doors are viewed from the exterior. Minimum to maximum door width dimensions refers to frame to frame dimension. Values represent minimum and maximum values without consideration of panel configuration. Consult design data for specific values for your venting configuration.

Contact your local Pella sales representative for the most current options and configurations available.