Product Selection Guide
- Size and Performance Data V-SH-2
- Features and Options V-SH-3
- Sound Transmission Class and Outdoor-Indoor Transmission Class V-SH-3

Glazing Performance V-SH-4
Grille Types V-SH-8
Standard Traditional Grille Breakpoints V-SH-10
Size Tables
- 2-11/16" New Construction Frame - East Region V-SH-13
- 2-Wide Equal Sash Vent V-SH-15
- 2-11/16" Replacement Flange Frame - Equal Sash - Florida Region V-SH-17
- New Construction Frame - Equal Sash - West Region V-SH-18

Special Sizes V-SH-22
Miscellaneous Formulas V-SH-24
Design Data
- 2-11/16" New Construction Frame - Equal Sash – East Region V-SH-26
- 2-11/16" Replacement Flange Frame - Equal Sash - Florida Region V-SH-31
- 2-11/16" New Construction Frame- Equal Sash - West Region V-SH-32
- 2-Wide Equal Sash Vent V-SH-33
- 3-Wide Equal Sash Vent V-SH-34

Detailed Product Descriptions V-SH-35
Unit Sections
- 2-11/16" New Construction Frame - East Region V-SH-37
- 2-11/16" Replacement Flush Flange Frame - Florida Region V-SH-42
- 2-11/16" Replacement Frame - East Region V-SH-44
- 2-11/16" New Construction Frame - West Region V-SH-46
- 2-11/16" Replacement Frame - West Region V-SH-48

Supporting documents for this product:

Test Reports
https://media.pella.com/professional/adm/CertificationReports/Test_Reports_Vinyl-TS.pdf

CSI Specs (readable using Microsft Word or other text editing application):
https://media.pella.com/professional/adm/Vinyl-CSI_Specs/08562_SH-EE.rtf

Detailed Product Description (readable using Microsft Word or other text editing application):
https://media.pella.com/professional/adm/Vinyl/V_SH.rtf

Size Tables (requires appropriate CAD software to read and use):
https://media.pella.com/professional/adm/Vinyl/VSH-Elev_D.dwg

CAD cross sections (requires appropriate CAD software to read and use):
https://media.pella.com/professional/adm/Vinyl/VSH-Detail_D.dwg

Combination Recommendations:
https://media.pella.com/professional/adm/Vinyl/ENC_CombRec.pdf

Installation Details:
https://media.pella.com/professional/adm/Vinyl/ENC_InstallDetails.pdf

The information published in this document is believed to be accurate at the time of publication. However, because we are constantly working to improve our products, specifications are subject to change without notice. Consult your local Pella representative for up-to-date product information.
Microsoft and Microsoft Word are registered trademarks of Microsoft Corp.

Encompass by Pella® vinyl window products are intended only for use less than 40 feet above ground level.

Encompass by Pella® Single-Hung Window

Size and Performance Data

East Region

	Flange Frame	Nail Fin		Block Frame	
		Standard	Performance Upgrade	Standard	Performance Upgrade
Sizes					
Standard Sizes	●	●	●	●	●
Special Sizes Available Built on 1/8" Increments	●	●	●	●	●
Curve Top Shapes	–	●	●	●	●
Frames					
Nail Fin for 1-9/16" Wall Depth	–	●	●	–	–
Nail Fin with J-Channel for 1-9/16" Wall Depth	–	●	●	–	–
Replacement Block Frame for 2-11/16" Frame Depth	–	–	–	●	●
Flush Flange for 2-9/16" Wall Depth	●	–	–	–	–
Interior Primed Wood Jamb Extensions	–	●	●	–	–
Performance [1]					
Meets or Exceeds AAMA/WDMA Ratings	H-R35 – R50 Hallmark Certified	R35 [2] Hallmark Certified	H – R50 Hallmark Certified	R35 [2] Hallmark Certified	H – R50 Hallmark Certified
Air Infiltration (cfm/ft² of frame @ 1.57 psf wind pressure)	0.22	0.20	0.12	0.20	0.12
Design Pressure	40–50 psf	20–35 psf	50 psf	20–35 psf	50 psf
Water Penetration Resistance	6.00–8.25 psf	5.25 psf	7.5 psf	5.25 psf	7.5 psf
Forced Entry Resistance	10	10	10	10	10
Operating Force (lb) Initiate Motion / Maintain Motion (of Hallmark tested size and glazing) [3]	30	30	30	30	30

West Region

	Nail Fin 2-11/16" Frame Depth	Block Frame 2-11/16" Frame Depth
Sizes		
Standard Sizes	●	–
Special Sizes Available Built on 1/8" Increments	●	●
Frames		
Nail Fin for 1-1/4" Wall Depth	●	–
Replacement Block Frame for 2-11/16" Frame Depth	–	●
Flush Fin for 2-9/16" Frame Depth	–	●
Performance [1]		
Meets or Exceeds AAMA/WDMA Ratings	H-R20 – R35 Hallmark Certified	H-R20 – R35 Hallmark Certified
Air Infiltration (cfm/ft² of frame @ 1.57 psf wind pressure)	0.22	0.22
Design Pressure	35 psf	35 psf
Water Penetration Resistance	5.25 psf	5.25 psf
Forced Entry Resistance	20	20
Operating Force (lb) Initiate Motion / Maintain Motion (of Hallmark tested size and glazing) [3]	30	30

Encompass by Pella® vinyl window products are intended only for use less than 40 feet above ground level.

East and West Regions

(–) = Not Available

(1) Published performance data is for single unit only. See Design Data pages in this section for specific product performance class and grade values.

(2) Fixed with vent flankers Performance Class and Grade rating H-R30 (all sizes).

(3) Glazing configurations may result in higher operational forces.

Features and Options	Block Frame	Nail Fin
Glazing (3/4" Insulating Glass)		
Glazing Type		
Dual-pane insulating glass	S	S
Insulated Glass Options / Low-E Types		
Advanced Low-E	O	O
NaturalSun Low-E	O	O
NaturalSun+ Low-E	O	O
SunDefense™ Low-E	O	O
SunDefense+ Low-E	O	O
Clear (no Low-E coating)	S	S
Additional Glass Options		
Annealed glass	S	S
Tempered glass	O	O
Obscure glass(1)	O	O
Bronze tinted glass **(East Only)**	O	O
Gas Fill / High Altitude		
Argon	O	O
High Altitude **(West Only)**	O	O
High Altitude with argon **(West Only)**	O	O

Features and Options	Block Frame	Nail Fin
Interior / Exterior Color (Regional availability may vary)		
White	S	S
Almond	O_2	O
Fossil	O_2	O
Grilles-Between-the-Glass		
Grille Types		
3/4" Contour	O	O
5/8" Flat **(West Only)**	O	O
Grille Patterns		
Traditional	O	O
Prairie	O	O
Top Row	O	O

Sound Transmission Class and Outdoor-Indoor Transmission Class

Frame Type	Frame Size Tested(3)	Glazing System			STC Rating	OITC Rating
		Overall Glazing Thickness	Exterior Glass Thickness	Interior Glass Thickness		
2-11/16" Frame (East Region Only)						
New Construction Frame	36" x 60"	3/4"	2.5 mm	2.5 mm	25	21
2-11/16" Frame (West Region Only)						
New Construction Frame	36" x 60"	3/4"	2.5 mm	2.5 mm	26	21
Replacement Frame	36" x 60"	3/4"	2.5 mm	2.5 mm	26	21

Encompass by Pella® vinyl window products are intended only for use less than 40 feet above ground level.

S = Standard; O = Optional

(1) Obscure glass patterns vary based on region.

(2) East Only

Size restrictions for units with Rain obscure glass are listed on the Special Size page of this section.

(3) ASTM E 1425 defines standard sizes for acoustical testing. Ratings achieved at that size are representative of all sizes of the same configuration.

East and West Regions

Encompass by Pella® Single-Hung Window

Glazing Performance - Total Unit

Glass Thickness	Type of Glazing	NFRC Certified Product #	Glass (mm)		Gap Fill	Performance Values[1]				Shaded Areas Meet ENERGY STAR® Performance Criteria in Zones Shown					
			Ext.	Int.		U-Factor	SHGC	VLT	CR	U. S. Zone				Canada[2] ER	Canada[2] Zone
										N	NC	SC	S		CA
Vent – 2-11/16" Frame Depth (Standard Performance ≤59.5" High)															
3/4"	Clear IG	PEL-N-107-00072-00001	2.5	2.5	air	0.47	0.64	0.67	44						
	with 3/4" Contour Grille	PEL-N-107-00072-00002				0.47	0.58	0.60	44						
3/4"	Advanced Low-E IG	PEL-N-107-00126-00001	2.5	2.5	air	0.32	0.31	0.58	56						
	with 3/4" Contour Grille	PEL-N-107-00126-00002				0.32	0.28	0.52	56						
3/4"	Advanced Low-E IG	PEL-N-107-00129-00001	2.5	2.5	argon	0.29	0.31	0.58	60						
	with 3/4" Contour Grille	PEL-N-107-00129-00002				0.29	0.28	0.52	60						
3/4"	NaturalSun Low-E IG	PEL-N-107-00125-00001	2.5	2.5	air	0.33	0.54	0.66	54						
	with 3/4" Contour Grille	PEL-N-107-00125-00002				0.33	0.49	0.59	54						
3/4"	NaturalSun Low-E IG	PEL-N-107-00128-00001	2.5	2.5	argon	0.30	0.54	0.66	59						
	with 3/4" Contour Grille	PEL-N-107-00128-00002				0.30	0.49	0.59	59						
3/4"	NaturalSun+ Low-E IG	PEL-N-107-00131-00001	2.5	2.5	argon	0.25	0.52	0.64	47	N				36	CA
	with 3/4" Contour Grille	PEL-N-107-00131-00002				0.25	0.47	0.57	47	N					
3/4"	SunDefense™ Low-E IG	PEL-N-107-00127-00001	2.5	2.5	air	0.32	0.23	0.54	57				S		
	with 3/4" Contour Grille	PEL-N-107-00127-00002				0.32	0.21	0.48	57				S		
3/4"	SunDefense™ Low-E IG	PEL-N-107-00130-00001	2.5	2.5	argon	0.28	0.23	0.54	60			SC	S		
	with 3/4" Contour Grille	PEL-N-107-00130-00002				0.28	0.21	0.48	60			SC	S		
3/4"	SunDefense+ Low-E IG	PEL-N-107-00133-00001	2.5	2.5	argon	0.24	0.22	0.52	48		NC	SC	S		
	with 3/4" Contour Grille	PEL-N-107-00133-00002				0.24	0.20	0.47	48		NC	SC	S		
3/4"	Bronze Advanced Low-E IG	PEL-N-107-00087-00001	3	3	argon	0.29	0.30	0.42	58						
	with 3/4" Contour Grille	PEL-N-107-00087-00002				0.29	0.27	0.38	58						
Vent – 2-11/16" Frame Depth with Foam (Standard Performance ≤59.5" High)															
3/4"	Advanced Low-E IG	PEL-N-107-00161-00001	2.5	2.5	air	0.32	0.31	0.58	56						
	with 3/4" Contour Grille	PEL-N-107-00161-00002				0.32	0.28	0.52	56						
3/4"	Advanced Low-E IG	PEL-N-107-00164-00001	2.5	2.5	argon	0.28	0.31	0.58	60						
	with 3/4" Contour Grille	PEL-N-107-00164-00002				0.28	0.28	0.52	60						
3/4"	NaturalSun Low-E IG	PEL-N-107-00160-00001	2.5	2.5	air	0.33	0.54	0.66	54						
	with 3/4" Contour Grille	PEL-N-107-00160-00002				0.33	0.49	0.59	54						
3/4"	NaturalSun Low-E IG	PEL-N-107-00163-00001	2.5	2.5	argon	0.29	0.54	0.66	59						
	with 3/4" Contour Grille	PEL-N-107-00163-00002				0.29	0.49	0.59	59						
3/4"	NaturalSun+ Low-E IG	PEL-N-107-00166-00001	2.5	2.5	argon	0.25	0.52	0.64	47	N				36	CA
	with 3/4" Contour Grille	PEL-N-107-00166-00002				0.25	0.47	0.57	47	N					
3/4"	SunDefense™ Low-E IG	PEL-N-107-00162-00001	2.5	2.5	air	0.32	0.23	0.54	57				S		
	with 3/4" Contour Grille	PEL-N-107-00162-00001				0.32	0.21	0.48	57				S		
3/4"	SunDefense™ Low-E IG	PEL-N-107-00165-00001	2.5	2.5	argon	0.28	0.23	0.54	60			SC	S		
	with 3/4" Contour Grille	PEL-N-107-00165-00002				0.28	0.21	0.48	60			SC	S		
3/4"	SunDefense+ Low-E IG	PEL-N-107-00168-00001	2.5	2.5	argon	0.24	0.22	0.52	48		NC	SC	S		
	with 3/4" Contour Grille	PEL-N-107-00168-00002				0.24	0.20	0.47	48		NC	SC	S		
3/4"	Bronze Advanced Low-E IG	PEL-N-107-00179-00001	3	3	argon	0.28	0.30	0.42	60						
	with 3/4" Contour Grille	PEL-N-107-00179-00002				0.28	0.27	0.38	60						

R-Value = 1/U-Factor
SHGC = Solar Heat Gain Coefficient
VLT % = Visible Light Transmission
CR = Condensation Resistance

(1) Glazing performance values are calculated based on NFRC 100, NFRC 200 and NFRC 500. ENERGY STAR® values are updated to 2023 (Version 7) criteria.

(2) The values shown are based on Canada's updated ENERGY STAR® 2020 initiative. For more information, see the ENERGY STAR guidelines.

Performance values on this page reflect units with standard performance. For performance values on units with a performance upgrade option, please contact Pella Corporation.

Climate Zones

East Region Only

Encompass by Pella® Single-Hung Window

Glazing Performance - Total Unit

Glass Thickness	Type of Glazing	NFRC Certified Product #	Glass (mm)		Gap Fill	Performance Values[1]				Shaded Areas Meet ENERGY STAR® Performance Criteria in Zones Shown					
			Ext.	Int.		U-Factor	SHGC	VLT	CR	U. S. Zone				Canada[2] ER	Canada[2] Zone
										N	NC	SC	S		CA
Vent – 2-11/16" Frame Depth (Standard Performance >59.5" High, or High Performance)															
3/4"	Clear IG	PEL-N-107-00072-00001	2.5	2.5	air	0.47	0.64	0.67	44						
	with 3/4" Contour Grille	PEL-N-107-00072-00002				0.47	0.58	0.60	44						
3/4"	Advanced Low-E IG	PEL-N-107-00074-00001	2.5	2.5	air	0.33	0.31	0.58	55						
	with 3/4" Contour Grille	PEL-N-107-00074-00001				0.33	0.28	0.52	55						
3/4"	Advanced Low-E IG	PEL-N-107-00077-00001	2.5	2.5	argon	0.29	0.31	0.58	58						
	with 3/4" Contour Grille	PEL-N-107-00077-00002				0.29	0.28	0.52	58						
3/4"	NaturalSun Low-E IG	PEL-N-107-00073-00001	2.5	2.5	air	0.34	0.54	0.66	54						
	with 3/4" Contour Grille	PEL-N-107-00073-00002				0.34	0.49	0.59	54						
3/4"	NaturalSun Low-E IG	PEL-N-107-00076-00001	2.5	2.5	argon	0.30	0.54	0.66	58						
	with 3/4" Contour Grille	PEL-N-107-00076-00002				0.30	0.49	0.59	58						
3/4"	NaturalSun+ Low-E IG	PEL-N-107-00188-00001	2.5	2.5	argon	0.26	0.52	0.64	47	N				35	CA
	with 3/4" Contour Grille	PEL-N-107-00188-00002				0.26	0.47	0.57	47	N					
3/4"	SunDefense™ Low-E IG	PEL-N-107-00075-00001	2.5	2.5	air	0.33	0.23	0.54	55						
	with 3/4" Contour Grille	PEL-N-107-00075-00002				0.33	0.21	0.48	55						
3/4"	SunDefense™ Low-E IG	PEL-N-107-00079-00001	2.5	2.5	argon	0.29	0.23	0.54	58				S		
	with 3/4" Contour Grille	PEL-N-107-00079-00002				0.29	0.21	0.48	58				S		
3/4"	SunDefense+ Low-E IG	PEL-N-107-00189-00001	2.5	2.5	argon	0.25	0.22	0.52	48		NC	SC	S		
	with 3/4" Contour Grille	PEL-N-107-00189-00002				0.25	0.20	0.47	48		NC	SC	S		
3/4"	Bronze Advanced Low-E IG	PEL-N-107-00087-00001	3	3	argon	0.29	0.30	0.42	58						
	with 3/4" Contour Grille	PEL-N-107-00087-00002				0.29	0.27	0.38	58						
Vent – 2-11/16" Frame Depth with Foam (Standard Performance >59.5" High, or High Performance)															
3/4"	Advanced Low-E IG	PEL-N-107-00201-00001	2.5	2.5	air	0.33	0.31	0.58	55						
	with 3/4" Contour Grille	PEL-N-107-00201-00002				0.33	0.28	0.52	55						
3/4"	Advanced Low-E IG	PEL-N-107-00204-00001	2.5	2.5	argon	0.29	0.31	0.58	58						
	with 3/4" Contour Grille	PEL-N-107-00204-00002				0.29	0.28	0.52	58						
3/4"	NaturalSun Low-E IG	PEL-N-107-00200-00001	2.5	2.5	air	0.34	0.54	0.66	54						
	with 3/4" Contour Grille	PEL-N-107-00200-00002				0.34	0.49	0.59	54						
3/4"	NaturalSun Low-E IG	PEL-N-107-00203-00001	2.5	2.5	argon	0.30	0.54	0.66	58						
	with 3/4" Contour Grille	PEL-N-107-00203-00002				0.30	0.49	0.59	58						
3/4"	NaturalSun+ Low-E IG	PEL-N-107-00206-00001	2.5	2.5	argon	0.26	0.52	0.64	46	N				35	CA
	with 3/4" Contour Grille	PEL-N-107-00206-00002				0.26	0.47	0.57	46	N					
3/4"	SunDefense™ Low-E IG	PEL-N-107-00202-00001	2.5	2.5	air	0.32	0.23	0.54	56				S		
	with 3/4" Contour Grille	PEL-N-107-00202-00002				0.32	0.21	0.48	56				S		
3/4"	SunDefense™ Low-E IG	PEL-N-107-00205-00001	2.5	2.5	argon	0.29	0.23	0.54	58				S		
	with 3/4" Contour Grille	PEL-N-107-00205-00002				0.29	0.21	0.48	58				S		
3/4"	SunDefense+ Low-E IG	PEL-N-107-00208-00001	2.5	2.5	argon	0.25	0.22	0.52	48		NC	SC	S		
	with 3/4" Contour Grille	PEL-N-107-00208-00002				0.25	0.20	0.47	48		NC	SC	S		
3/4"	Bronze Advanced Low-E IG	PEL-N-107-00215-00001	3	3	argon	0.29	0.30	0.42	58						
	with 3/4" Contour Grille	PEL-N-107-00215-00002				0.29	0.27	0.38	58						

R-Value = 1/U-Factor
SHGC = Solar Heat Gain Coefficient
VLT % = Visible Light Transmission
CR = Condensation Resistance

(1) Glazing performance values are calculated based on NFRC 100, NFRC 200 and NFRC 500. ENERGY STAR® values are updated to 2023 (Version 7) criteria.

(2) The values shown are based on Canada's updated ENERGY STAR® 2020 initiative. For more information, see the ENERGY STAR guidelines.

Performance values on this page reflect units with standard performance. For performance values on units with a performance upgrade option, please contact Pella Corporation.

Climate Zones

Encompass by Pella® Single-Hung Window

Glazing Performance - Total Unit

Glass Thickness	Type of Glazing	NFRC Certified Product #	Glass (mm)		Gap Fill	Performance Values[1]				Shaded Areas Meet ENERGY STAR® Performance Criteria in Zones Shown					
			Ext.	Int.		U-Factor	SHGC	VLT	CR	U. S. Zone				Canada[2] ER	Canada[2] Zone
										N	NC	SC	S		CA
Vent – 2-11/16" Frame Depth (Standard Performance ≤36" Wide)															
3/4"	Clear IG	PEL-N-106-00058-00001	2.5	2.5	air	0.47	0.64	0.67	44						
	with Grilles-between-the-glass	PEL-N-106-00058-00002				0.47	0.58	0.60	44						
3/4"	Advanced Low-E IG	PEL-N-106-00157-00001	2.5	2.5	air	0.32	0.30	0.57	56						
	with Grilles-between-the-glass	PEL-N-106-00157-00002				0.32	0.27	0.51	56						
3/4"	Advanced Low-E IG	PEL-N-106-00160-00001	2.5	2.5	argon	0.29	0.30	0.57	60						
	with Grilles-between-the-glass	PEL-N-106-00160-00002				0.29	0.27	0.51	60						
3/4"	NaturalSun Low-E IG	PEL-N-106-00156-00001	2.5	2.5	air	0.33	0.53	0.64	55						
	with Grilles-between-the-glass	PEL-N-106-00156-00002				0.33	0.48	0.57	55						
3/4"	NaturalSun Low-E IG	PEL-N-106-00159-00001	2.5	2.5	argon	0.30	0.53	0.64	59						
	with Grilles-between-the-glass	PEL-N-106-00159-00002				0.30	0.48	0.57	59						
3/4"	NaturalSun+ Low-E IG	PEL-N-106-00163-00001	2.5	2.5	argon	0.25	0.51	0.63	47	N				36	CA
	with Grilles-between-the-glass	PEL-N-106-00163-00002				0.25	0.46	0.56	47	N					
3/4"	SunDefense™ Low-E IG	PEL-N-106-00158-00001	2.5	2.5	air	0.32	0.23	0.53	56				S		
	with Grilles-between-the-glass	PEL-N-106-00158-00002				0.32	0.21	0.47	56				S		
3/4"	SunDefense™ Low-E IG	PEL-N-106-00162-00001	2.5	2.5	argon	0.28	0.22	0.53	60			SC	S		
	with Grilles-between-the-glass	PEL-N-106-00162-00002				0.28	0.20	0.47	60			SC	S		
3/4"	SunDefense+ Low-E IG	PEL-N-106-00164-00001	2.5	2.5	argon	0.24	0.22	0.51	48		NC	SC	S		
	with Grilles-between-the-glass	PEL-N-106-00164-00002				0.24	0.20	0.46	48		NC	SC	S		
3/4"	Bronze Advanced Low-E IG	PEL-N-106-00085-00001	3	3	argon	0.29	0.30	0.41	58						
	with Grilles-between-the-glass	PEL-N-106-00085-00002				0.29	0.27	0.37	58						
Vent – 2-11/16" Frame Depth with Foam (Standard Performance ≤36" Wide)															
3/4"	Advanced Low-E IG	PEL-N-106-00183-00001	2.5	2.5	air	0.32	0.30	0.57	56						
	with Grilles-between-the-glass	PEL-N-106-00183-00002				0.32	0.27	0.51	56						
3/4"	Advanced Low-E IG	PEL-N-106-00186-00001	2.5	2.5	argon	0.28	0.30	0.57	60						
	with Grilles-between-the-glass	PEL-N-106-00186-00002				0.28	0.27	0.51	60						
3/4"	NaturalSun Low-E IG	PEL-N-106-00182-00001	2.5	2.5	air	0.33	0.53	0.64	55						
	with Grilles-between-the-glass	PEL-N-106-00182-00002				0.33	0.48	0.57	55						
3/4"	NaturalSun Low-E IG	PEL-N-106-00185-00001	2.5	2.5	argon	0.29	0.53	0.64	59						
	with Grilles-between-the-glass	PEL-N-106-00185-00002				0.29	0.48	0.57	59						
3/4"	NaturalSun+ Low-E IG	PEL-N-106-00189-00001	2.5	2.5	argon	0.25	0.51	0.63	47	N				36	CA
	with Grilles-between-the-glass	PEL-N-106-00189-00002				0.25	0.46	0.56	47	N					
3/4"	SunDefense™ Low-E IG	PEL-N-106-00184-00001	2.5	2.5	air	0.31	0.23	0.53	56				S		
	with Grilles-between-the-glass	PEL-N-106-00184-00002				0.31	0.21	0.47	56				S		
3/4"	SunDefense™ Low-E IG	PEL-N-106-00188-00001	2.5	2.5	argon	0.28	0.22	0.53	60			SC	S		
	with Grilles-between-the-glass	PEL-N-106-00188-00002				0.28	0.20	0.47	60			SC	S		
3/4"	SunDefense+ Low-E IG	PEL-N-106-00190-00001	2.5	2.5	argon	0.24	0.22	0.51	48		NC	SC	S		
	with Grilles-between-the-glass	PEL-N-106-00190-00001				0.24	0.20	0.46	48		NC	SC	S		
3/4"	Bronze Advanced Low-E IG	PEL-N-106-00199-00001	3	3	argon	0.28	0.30	0.41	59						
	with Grilles-between-the-glass	PEL-N-106-00199-00002				0.28	0.27	0.37	59						

R-Value = 1/U-Factor
SHGC = Solar Heat Gain Coefficient
VLT % = Visible Light Transmission
CR = Condensation Resistance

(1) Glazing performance values are calculated based on NFRC 100, NFRC 200 and NFRC 500. ENERGY STAR® values are updated to 2023 (version 7) criteria.

(2) The values shown are based on Canada's updated ENERGY STAR® 2020 initiative. For more information, see the ENERGY STAR guidelines.

Performance values on this page reflect units with standard performance. For performance values on units with a performance upgrade option, please contact Pella Corporation.

Climate Zones

Encompass by Pella® Single-Hung Window

Glazing Performance - Total Unit

Glass Thickness	Type of Glazing	NFRC Certified Product #	Glass (mm)		Gap Fill	Performance Values[1]				Shaded Areas Meet ENERGY STAR® Performance Criteria in Zones Shown					
			Ext.	Int.		U-Factor	SHGC	VLT	CR	U. S. Zone				Canada[2] ER	Canada[2] Zone
										N	NC	SC	S		CA
Vent – 2-11/16" Frame Depth (Standard Performance >36" Wide, or High Performance)															
3/4"	Clear IG	PEL-N-106-00058-00001	2.5	2.5	air	0.47	0.64	0.67	44						
	with Grilles-between-the-glass	PEL-N-106-00058-00002				0.47	0.58	0.60	44						
3/4"	Advanced Low-E IG	PEL-N-106-00060-00001	2.5	2.5	air	0.33	0.30	0.57	55						
	with Grilles-between-the-glass	PEL-N-106-00060-00002				0.33	0.27	0.51	55						
3/4"	Advanced Low-E IG	PEL-N-106-00064-00001	2.5	2.5	argon	0.29	0.30	0.57	59						
	with Grilles-between-the-glass	PEL-N-106-00064-00002				0.29	0.27	0.51	59						
3/4"	NaturalSun Low-E IG	PEL-N-106-00059-00001	2.5	2.5	air	0.34	0.53	0.64	54						
	with Grilles-between-the-glass	PEL-N-106-00059-00002				0.34	0.48	0.57	54						
3/4"	NaturalSun Low-E IG	PEL-N-106-00063-00001	2.5	2.5	argon	0.30	0.53	0.64	58						
	with Grilles-between-the-glass	PEL-N-106-00063-00002				0.30	0.48	0.58	58						
3/4"	NaturalSun+ Low-E IG	PEL-N-106-00207-00001	2.5	2.5	argon	0.26	0.51	0.63	46	N				35	CA
	with Grilles-between-the-glass	PEL-N-106-00207-00002				0.26	0.46	0.56	46	N					
3/4"	SunDefense™ Low-E IG	PEL-N-106-00062-00001	2.5	2.5	air	0.32	0.23	0.53	55				S		
	with Grilles-between-the-glass	PEL-N-106-00062-00001				0.32	0.21	0.47	55				S		
3/4"	SunDefense™ Low-E IG	PEL-N-106-00066-00001	2.5	2.5	argon	0.29	0.22	0.53	59				S		
	with Grilles-between-the-glass	PEL-N-106-00066-00002				0.29	0.20	0.47	59				S		
3/4"	SunDefense+ Low-E IG	PEL-N-106-00208-00001	2.5	2.5	argon	0.25	0.22	0.51	48		NC	SC	S		
	with Grilles-between-the-glass	PEL-N-106-00208-00002				0.25	0.20	0.46	48		NC	SC	S		
3/4"	Bronze Advanced Low-E IG	PEL-N-106-00085-00001	3	3	argon	0.29	0.30	0.41	58						
	with Grilles-between-the-glass	PEL-N-106-00085-00002				0.29	0.27	0.37	58						
Vent – 2-11/16" Frame Depth with Foam (Standard Performance >36" Wide, or High Performance)															
3/4"	Advanced Low-E IG	PEL-N-106-00216-00001	2.5	2.5	air	0.32	0.30	0.57	56						
	with Grilles-between-the-glass	PEL-N-106-00216-00002				0.32	0.27	0.51	56						
3/4"	Advanced Low-E IG	PEL-N-106-00219-00001	2.5	2.5	argon	0.29	0.30	0.57	59						
	with Grilles-between-the-glass	PEL-N-106-00219-00002				0.29	0.27	0.51	59						
3/4"	NaturalSun Low-E IG	PEL-N-106-00215-00001	2.5	2.5	air	0.33	0.53	0.64	55						
	with Grilles-between-the-glass	PEL-N-106-00215-00002				0.33	0.48	0.57	55						
3/4"	NaturalSun Low-E IG	PEL-N-106-00218-00001	2.5	2.5	argon	0.30	0.53	0.64	59						
	with Grilles-between-the-glass	PEL-N-106-00218-00001				0.30	0.48	0.57	59						
3/4"	NaturalSun+ Low-E IG	PEL-N-106-00222-00001	2.5	2.5	argon	0.25	0.51	0.63	47	N				36	CA
	with Grilles-between-the-glass	PEL-N-106-00222-00002				0.25	0.46	0.56	47	N					
3/4"	SunDefense™ Low-E IG	PEL-N-106-00217-00001	2.5	2.5	air	0.32	0.23	0.53	56				S		
	with Grilles-between-the-glass	PEL-N-106-00217-00002				0.32	0.21	0.47	56				S		
3/4"	SunDefense™ Low-E IG	PEL-N-106-00221-00001	2.5	2.5	argon	0.28	0.22	0.53	60			SC	S		
	with Grilles-between-the-glass	PEL-N-106-00221-00002				0.28	0.20	0.47	60			SC	S		
3/4"	SunDefense+ Low-E IG	PEL-N-106-00223-00001	2.5	2.5	argon	0.24	0.22	0.51	48		NC	SC	S		
	with Grilles-between-the-glass	PEL-N-106-00223-00002				0.24	0.20	0.46	48		NC	SC	S		
3/4"	Bronze Advanced Low-E IG	PEL-N-106-00227-00001	3	3	argon	0.29	0.30	0.41	58						
	with Grilles-between-the-glass	PEL-N-106-00227-00001				0.29	0.27	0.37	58						

R-Value = 1/U-Factor
SHGC = Solar Heat Gain Coefficient
VLT % = Visible Light Transmission
CR = Condensation Resistance

(1) Glazing performance values are calculated based on NFRC 100, NFRC 200 and NFRC 500. ENERGY STAR® values are updated to 2023 (version 7) criteria.

(2) The values shown are based on Canada's updated ENERGY STAR® 2020 initiative. For more information, see the ENERGY STAR guidelines.

Performance values on this page reflect units with standard performance. For performance values on units with a performance upgrade option, please contact Pella Corporation.

Grilles

Grille Profiles

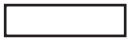

5/8" Flat Grille

(West Region Only)

3/4" Contour Grille

(East and West Region)

Grille Patterns

Prairie Lite Patterns

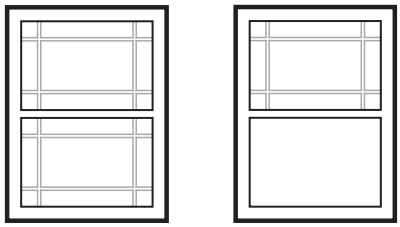

9-Lite Prairie

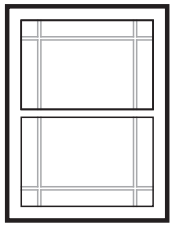

6-Lite Prairie

Prairie

- Specify upper or both sash.
- Approximately 4" from edge of sash to center of bar.
- Minimum actual glass is 13".

Other Available Patterns

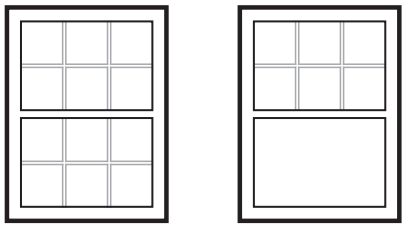

Traditional

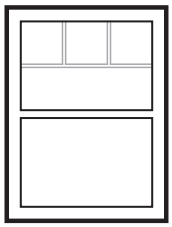

Top Row

Traditional

- Specify upper or both sash.
- Specify number of lites.
- Grilles must be equally divided on visible glass.
- Minimum 6" x 6" center-to-center.

Top Row

- Standard visible glass to separator bar must be ≤1/2 upper actual glass.

Not available with 1/2" Flange Windows.
The fixed upper sash of single-hung units will vary in height for 24" to 36" venting units.
Actual grille spacing may be different than shown in drawings.

East and West Regions

Curve Top Grille Patterns (East Region)

Single Vent

Traditional and Custom Traditional

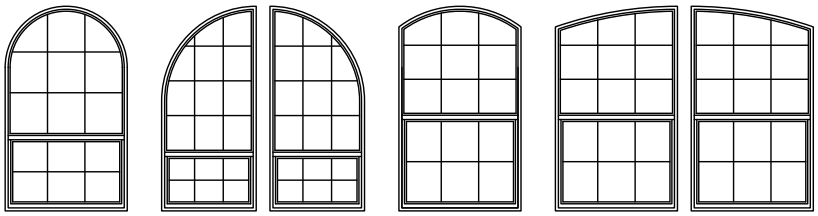

9-Lite Prairie

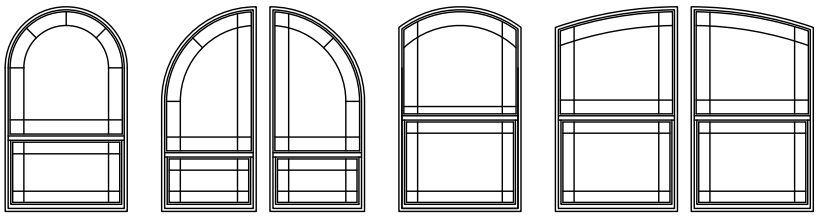

Sunburst

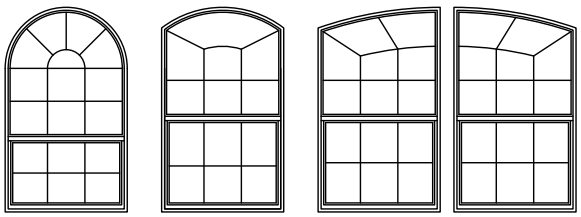

2- and 3-Wide Combinations

Traditional and Custom Traditional

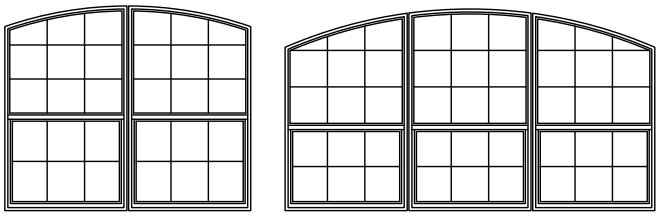

9-Lite Prairie

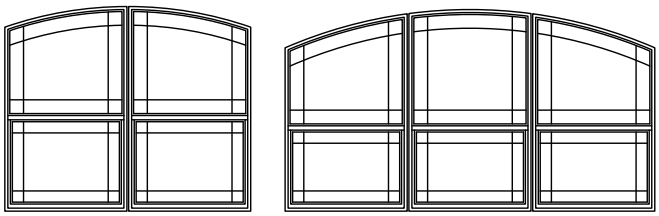

Sunburst

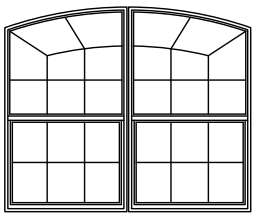

East Region Only

Encompass by Pella® Single-Hung Window

Standard Traditional Grille Breakpoints

Actual Frame Heights			LITES	Actual Frame Widths: 1-Wide	2-Wide	3-Wide	4-Wide
				14-1/2" to 17-3/8"	17-1/2" to 27-1/2"	27-5/8" to 44-3/8"	44-1/2" to 48"
1/2 Vent Units							
Actual Frame Heights	1-High	23-1/2" to 29-3/8"					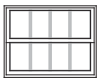
	2-High	29-1/2" to 65-1/2"		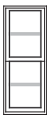	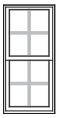	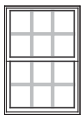	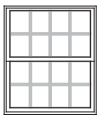
	3-High	65-5/8" to 71-1/2"			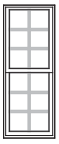	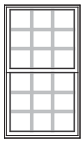	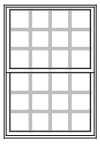
24" Vent Units							
Actual Frame Heights	2/2-High	47-1/2" to 56-1/2"		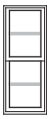	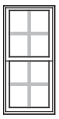	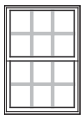	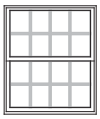
	3/2-High	56-5/8" to 65-3/4"		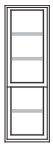	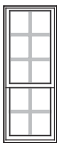	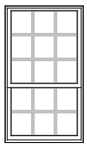	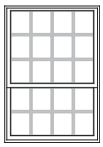
	4/2-High	65-7/8" to 77-1/4"		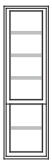		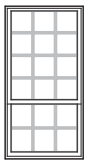	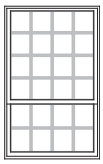
	5/2-High	77-3/8" to 84"				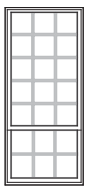	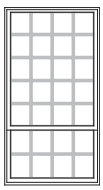

Not available with 1/2" Flange Windows.
The fixed upper sash of single-hung units will vary in height for 24" to 36" venting units.
Actual grille spacing may be different than shown in drawings.

East and West Regions

Encompass by Pella® Single-Hung Window

Standard Traditional Grille Breakpoints

Actual Frame Heights			Actual Frame Widths			
		LITES	1-Wide	2-Wide	3-Wide	4-Wide
			14-1/2" to 17-3/8"	17-1/2" to 27-1/2"	27-5/8" to 44-3/8"	44-1/2" to 48"
			30" Vent Units			
2/2-High	59-1/2" to 62-1/2"		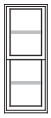	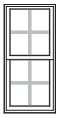	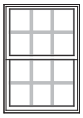	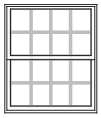
3/2-High	62-5/8" to 71-3/4"		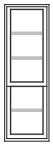	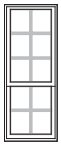	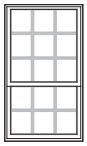	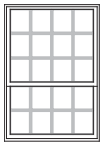
4/2-High	71-7/8" to 83-1/4"		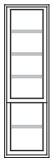	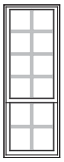	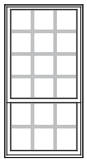	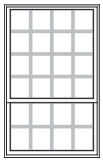
5/2-High	83-3/8" to 84"		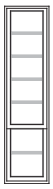	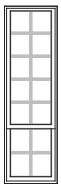	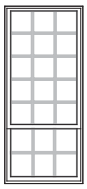	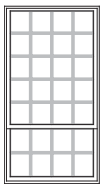

Not available with 1/2" Flange Windows.
The fixed upper sash of single-hung units will vary in height for 24" to 36" venting units.
Actual grille spacing may be different than shown in drawings.

East and West Regions

Standard Traditional Grille Breakpoints

Actual Frame Heights			Actual Frame Widths			
		LITES	1-Wide	2-Wide	3-Wide	4-Wide
			14-1/2" to 17-3/8"	17-1/2" to 27-1/2"	27-5/8" to 44-3/8"	44-1/2" to 48"
			36" Vent Units			
3/3-High	71-1/2" to 78-1/2"		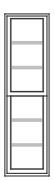	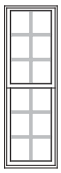	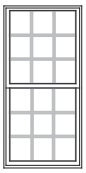	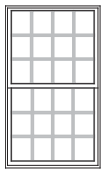
4/3-High	78-5/8" to 84"		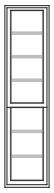	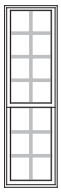	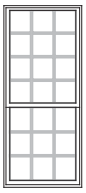	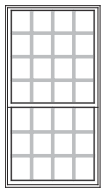

Fixed (for units with Vent Flankers)

Actual Frame Widths			Actual Frame Widths			
		LITES	1-Wide	2-Wide	3-Wide	4-Wide
			<17-1/2"	17-1/2" to 27-1/2"	27-5/8" to 44-3/8"	44-1/2" to 65-3/8"
2-High	23" to 29-3/8"				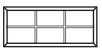	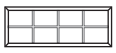
4-High	29-1/2" to 65"			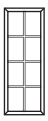	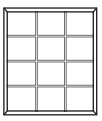	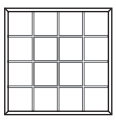
6-High	65-1/8 to 71-1/2"			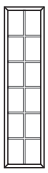	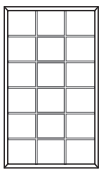	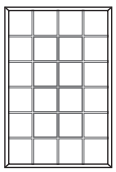

Not available with 1/2" Flange Windows.
The fixed upper sash of single-hung units will vary in height for 24" to 36" venting units.
Actual grille spacing may be different than shown in drawings.

East and West Regions

Size Tables - 2-11/16" New Construction Frame – Equal Sash, East Region

			(610) (597)	(711) (699)	(762) (749)	(813) (800)	(914) (902)	(1 016) (1 003)	(1 219) (1 207)
		Opening	2' 0"	2' 4"	2' 6"	2' 8"	3' 0"	3' 4"	4' 0"
		Frame	23 1/2"	27 1/2"	29 1/2"	31 1/2"	35 1/2"	39 1/2"	47 1/2"
(914) (902)	3' 0"	35 1/2"	2-0/3-0	2-4/3-0	2-6/3-0	2-8/3-0	3-0/3-0	3-4/3-0	4-0/3-0
(965) (953)	3' 2"	37 1/2"	2-0/3-2	2-4/3-2	2-6/3-2	2-8/3-2	3-0/3-2	3-4/3-2	4-0/3-2
(1 067) (1 054)	3' 6"	41 1/2"	2-0/3-6	2-4/3-6	2-6/3-6	2-8/3-6	3-0/3-6	3-4/3-6	4-0/3-6
(1 160) (1 156)	3' 10"	45 1/2"	2-0/3-10	2-4/3-10	2-6/3-10	2-8/3-10	3-0/3-10	3-4/3-10	4-0/3-10
(1 219) (1 207)	4' 0"	47 1/2"	2-0/4-0	2-4/4-0	2-6/4-0	2-8/4-0	3-0/4-0	3-4/4-0	4-0/4-0
(1 321) (1 308)	4' 4"	51 1/2"	2-0/4-4	2-4/4-4	2-6/4-4	2-8/4-4	3-0/4-4	3-4/4-4	4-0/4-4
(1 372) (1 359)	4' 6"	53 1/2"	2-0/4-6	2-4/4-6	2-6/4-6	2-8/4-6	3-0/4-6	3-4/4-6	4-0/4-6
(1 524) (1 511)	5' 0"	59 1/2"	2-0/5-0	2-4/5-0	2-6/5-0	2-8/5-0 E1	3-0/5-0 E	3-4/5-0 E	4-0/5-0 E
(1 575) (1 562)	5' 2"	61 1/2"	2-0/5-2	2-4/5-2	2-6/5-2	2-8/5-2 E1	3-0/5-2 E	3-4/5-2 E	4-0/5-2 E

Egress Notes:

Check all applicable local codes for emergency egress requirements.

- E = Window meets minimum clear opening of 24" height, 20" width, and 5.7 ft².
- E1 = Window meets minimum clear opening of 24" height, 20" width, and 5.0 ft².

See Design Data pages in this section for clear opening dimensions.

East Region Only

Not to scale.
Single units with Frame Height of 59-1/2'' or greater and frame width of 29-1/2'' or greater are available with a dry-wall pass through option.
Two wide composites with individual units of frame size greater or equal to 29-1/2'' x 59-1/2'' and less than or equal to 35-1/2'' x 71-1/2'' are available with a dry-wall pass through option.

Size Tables - 2-11/16" New Construction Frame – Equal Sash, East Region

		(610) (597)	(711) (699)	(762) (749)	(813) (800)	(914) (902)	(1 016) (1 003)	(1 219) (1 207)
	Opening	2' 0"	2' 4"	2' 6"	2' 8"	3' 0"	3' 4"	4' 0"
	Frame	23 1/2"	27 1/2"	29 1/2"	31 1/2"	35 1/2"	39 1/2"	47 1/2"
(1 676) (1 664)	5' 6" / 65 1/2"	2-0/5-6	2-4/5-6	2-6/5-6 E1	2-8/5-6 E	3-0/5-6 E	3-4/5-6 E	4-0/5-6 E
(1 829) (1 816)	6' 0" / 71 1/2"	2-0/6-0	2-4/6-0 E1	2-6/6-0 E1	2-8/6-0 E	3-0/6-0 E	3-4/6-0 E	4-0/6-0 E

Egress Notes:

Check all applicable local codes for emergency egress requirements.

- E = Window meets minimum clear opening of 24" height, 20" width, and 5.7 ft².
- E1 = Window meets minimum clear opening of 24" height, 20" width, and 5.0 ft².

See Design Data pages in this section for clear opening dimensions.

East Region Only

Not to scale.
Single units with Frame Height of 59-1/2'' or greater and frame width of 29-1/2'' or greater are available with a dry-wall pass through option.
Two wide composites with individual units of frame size greater or equal to 29-1/2'' x 59-1/2'' and less than or equal to 35-1/2'' x 71-1/2'' are available with a dry-wall pass through option.

Encompass by Pella® Single-Hung Window

Size Tables - 2-11/16" New Construction Frame – 2-Wide Equal Sash, East Region

		(1 219) (1 207)	(1 422) (1 410)	(1 524) (1 511)	(1 626) (1 613)	(1 829) (1 816)	(2 032) (2 019)
	Opening	4' 0"	4' 8"	5' 0"	5' 4"	6' 0"	6' 8"
	Frame	47 1/2"	55 1/2"	59 1/2"	63 1/2"	71 1/2"	79 1/2"
(914) (902)	3' 0"	35 1/2"	4-0/3-0	4-8/3-0	5-0/3-0	5-4/3-0	6-0/3-0	6-8/3-0
(965) (953)	3' 2"	37 1/2"	4-0/3-2	4-8/3-2	5-0/3-2	5-4/3-2	6-0/3-2	6-8/3-2
(1 067) (1 054)	3' 6"	41 1/2"	4-0/3-6	4-8/3-6	5-0/3-6	5-4/3-6	6-0/3-6	6-8/3-6
(1 160) (1 156)	3' 10"	45 1/2"	4-0/3-10	4-8/3-10	5-0/3-10	5-4/3-10	6-0/3-10	6-8/3-10
(1 219) (1 207)	4' 0"	47 1/2"	4-0/4-0	4-8/4-0	5-0/4-0	5-4/4-0	6-0/4-0	6-8/4-0
(1 321) (1 308)	4' 4"	51 1/2"	4-0/4-4	4-8/4-4	5-0/4-4	5-4/4-4	6-0/4-4	6-8/4-4
(1 372) (1 359)	4' 6"	53 1/2"	4-0/4-6	4-8/4-6	5-0/4-6	5-4/4-6	6-0/4-6	6-8/4-6
(1 524) (1 511)	5' 0"	59 1/2"	4-0/5-0	4-8/5-0	5-0/5-0	5-4/5-0 E1	6-0/5-0 E	6-8/5-0 E
(1 575) (1 562)	5' 2"	61 1/2"	4-0/5-2	4-8/5-2	5-0/5-2	5-4/5-2 E1	6-0/5-2 E	6-8/5-2 E
(1 676) (1 664)	5' 6"	65 1/2"	4-0/5-6	4-8/5-6	5-0/5-6 E1	5-4/5-6 E	6-0/5-6 E	6-8/5-6 E
(1 829) (1 816)	6' 0"	71 1/2"	4-0/6-0	4-8/6-0 E1	5-0/6-0 E	5-4/6-0 E	6-0/6-0 E	6-8/6-0 E

Egress Notes:

Check all applicable local codes for emergency egress requirements.

E = Window meets minimum clear opening of 24" height, 20" width, and 5.7 ft².

E1 = Window meets minimum clear opening of 24" height, 20" width, and 5.0 ft².

See Design Data pages in this section for clear opening dimensions.

East Region Only

Not to scale.

Encompass by Pella® Single-Hung Window

Size Tables - 2-11/16" New Construction Frame – 3-Wide Equal Sash, East Region

		(1 829) (1 816)	(2 134) (2 121)	(2 286) (2 273)	(2 438) (2 426)	(2 743) (2 731)
	Opening	6' 0"	7' 0"	7' 6"	8' 0"	9' 0"
	Frame	71 1/2"	83 1/2"	89 1/2"	95 1/2"	107 1/2"
(914) (902)	3' 0"	6-0/3-0	7-0/3-0	7-6/3-0	8-0/3-0	9-0/3-0
(965) (953)	3' 2"	6-0/3-2	7-0/3-2	7-6/3-2	8-0/3-2	9-0/3-2
(1 067) (1 054)	3' 6"	6-0/3-6	7-0/3-6	7-6/3-6	8-0/3-6	9-0/3-6
(1 160) (1 156)	3' 10"	6-0/3-10	7-0/3-10	7-6/3-10	8-0/3-10	9-0/3-10
(1 219) (1 207)	4' 0"	6-0/4-0	7-0/4-0	7-6/4-0	8-0/4-0	9-0/4-0
(1 321) (1 308)	4' 4"	6-0/4-4	7-0/4-4	7-6/4-4	8-0/4-4	9-0/4-4
(1 372) (1 359)	4' 6"	6-0/4-6	7-0/4-6	7-6/4-6	8-0/4-6	9-0/4-6
(1 524) (1 511)	5' 0"	6-0/5-0	7-0/5-0	7-6/5-0	8-0/5-0 E1	9-0/5-0 E
(1 575) (1 562)	5' 2"	6-0/5-2	7-0/5-2	7-6/5-2	8-0/5-2 E1	9-0/5-2 E
(1 676) (1 664)	5' 6"	6-0/5-6	7-0/5-6	7-6/5-6 E1	8-0/5-6 E1	
(1 829) (1 816)	6' 0"	6-0/6-0	7-0/6-0 E1	7-6/6-0 E	8-0/6-0 E	

35 1/2"	
37 1/2"	
41 1/2"	
45 1/2"	
47 1/2"	
51 1/2"	
53 1/2"	
59 1/2"	
61 1/2"	
65 1/2"	
71 1/2"	

Egress Notes:

Check all applicable local codes for emergency egress requirements.

E = Window meets minimum clear opening of 24" height, 20" width, and 5.7 ft².

E1 = Window meets minimum clear opening of 24" height, 20" width, and 5.0 ft².

See Design Data pages in this section for clear opening dimensions.

Not to scale.

East Region Only

Size Tables - 2-11/16" Replacement Flange Frame – Equal Sash, Florida Region

Call Size	1	H3	2	3
Masonry	19 7/8"	27 1/4"	37 3/4"	53 7/8"
Buck	18 3/8"	25 3/4"	36 1/4"	52 3/8"
Frame	18 1/8"	25 1/2"	36"	52 1/8"
Tip to Tip	19 3/8"	26 3/4"	37 1/4"	53 3/8"

2	3	4	5	6
25 1/4"	26"	37 5/8"	49 7/8"	62 1/4"	75 1/4"
25"	26 1/4"	37 3/8"	49 5/8"	62"	75"
26 1/4"	38 5/8"	50 7/8"	63 1/4"	76 1/4"

FL-12	FL-H32	FL-22	FL-32
FL-13	FL-H33	FL-23	FL-33
FL-14	FL-H34	FL-24	FL-34
FL-15	FL-H35	FL-25 E	FL-35 E
FL-16	FL-H36 E1	FL-26 E	

Egress Notes:

Check all applicable local codes for emergency egress requirements.

E = Window meets minimum clear opening of 24" height, 20" width, and 5.7 ft².

E1 = Window meets minimum clear opening of 24" height, 20" width, and 5.0 ft².

See Design Data pages in this section for clear opening dimensions.

Not to scale.

Florida Region Only

Size Tables - 2-11/16" New Construction Frame – Equal Sash, West Region

		(610) (597)	(762) (749)	(914) (902)	(1 067) (1 054)
	Opening	2' 0"	2' 6"	3' 0"	3' 6"
	Frame	23 1/2"	29 1/2"	35 1/2"	41 1/2"
(914) (902)	3' 0"	35 1/2"	2-0/3-0	2-6/3-0	3-0/3-0	3-6/3-0
(1 067) (1 054)	3' 6"	41 1/2"	2-0/3-6	2-6/3-6	3-0/3-6	3-6/3-6
(1 219) (1 207)	4' 0"	47 1/2"	2-0/4-0	2-6/4-0	3-0/4-0	3-6/4-0
(1 372) (1 359)	4' 6"	53 1/2"	2-0/4-6	2-6/4-6	3-0/4-6	3-6/4-6
(1 524) (1 511)	5' 0"	59 1/2"	2-0/5-0	2-6/5-0	3-0/5-0 E	3-6/5-0 E
(1 676) (1 664)	5' 6"	65 1/2"	2-0/5-6	2-6/5-6 E1	3-0/5-6 E	3-6/5-6 E
(1 829) (1 816)	6' 0"	71 1/2"	2-0/6-0	2-6/6-0 E	3-0/6-0 E	3-6/6-0 E

Egress Notes:

Check all applicable local codes for emergency egress requirements.

E = Window meets minimum clear opening of 24" height, 20" width, and 5.7 ft².

E1 = Window meets minimum clear opening of 24" height, 20" width, and 5.0 ft².

See Design Data pages in this section for clear opening dimensions.

Not to scale.

West Region Only

Encompass by Pella® Single-Hung Window

Size Tables - 2-11/16" New Construction Frame – Equal Sash, West Region

Opening			4' 0" (1 219) (1 207)	5' 0" (1 524) (1 511)	6' 0" (1 829) (1 816)	7' 0" (2 134) (2 121)
	Frame		47 1/2"	59 1/2"	71 1/2"	83 1/2"
3' 0" (914) (902)	35 1/2"		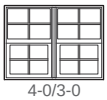 4-0/3-0	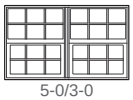 5-0/3-0	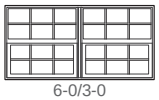 6-0/3-0	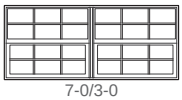 7-0/3-0
3' 6" (1 067) (1 054)	41 1/2"		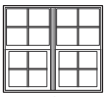 4-0/3-6	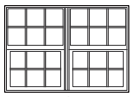 5-0/3-6	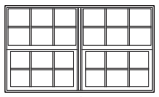 6-0/3-6	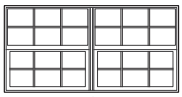 7-0/3-6
4' 0" (1 219) (1 207)	47 1/2"		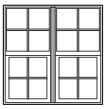 4-0/4-0	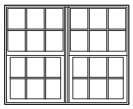 5-0/4-0	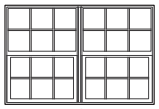 6-0/4-0	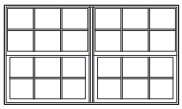 7-0/4-0
4' 6" (1 372) (1 359)	53 1/2"		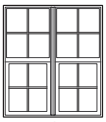 4-0/4-6	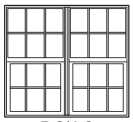 5-0/4-6	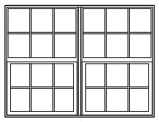 6-0/4-6	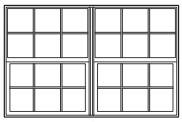 7-0/4-6
5' 0" (1 524) (1 511)	59 1/2"		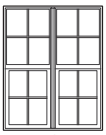 4-0/5-0	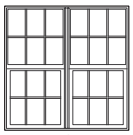 5-0/5-0	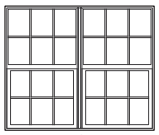 6-0/5-0 E	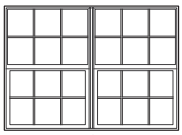 7-0/5-0 E
5' 6" (1 676) (1 664)	65 1/2"		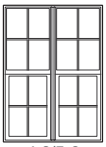 4-0/5-6	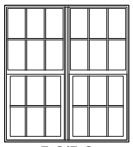 5-0/5-6 E_1	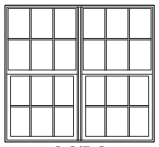 6-0/5-6 E	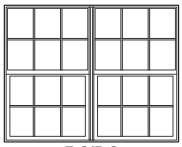 7-0/5-6 E
6' 0" (1 829) (1 816)	71 1/2"		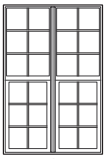 4-0/6-0	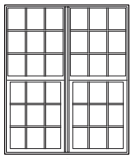 5-0/6-0 E	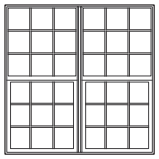 6-0/6-0 E	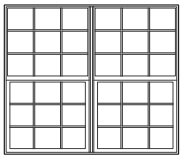 7-0/6-0 E

Egress Notes:

Check all applicable local codes for emergency egress requirements.

E = Window meets minimum clear opening of 24" height, 20" width, and 5.7 ft².

E_1 = Window meets minimum clear opening of 24" height, 20" width, and 5.0 ft².

See Design Data pages in this section for clear opening dimensions.

Not to scale.

West Region Only

Encompass by Pella® Single-Hung Window

Size Tables - 2-11/16" New Construction Frame – Equal Sash, West Region

		(1 829) (1 816)	(2 286) (2 273)	(2 743) (2 730)
	Opening	6' 0"	7' 6"	9' 0"
	Frame	71 1/2"	89 1/2"	107 1/2"
(914) (902)	3' 0"	35 1/2"	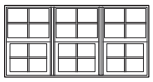 6-0/3-0	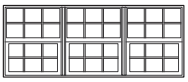 7-6/3-0	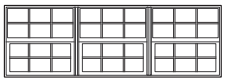 9-0/3-0
(1 067) (1 054)	3' 6"	41 1/2"	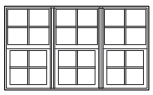 6-0/3-6	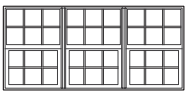 7-6/3-6	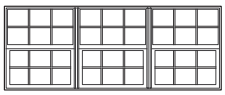 9-0/3-6
(1 219) (1 207)	4' 0"	47 1/2"	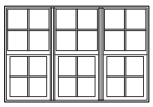 6-0/4-0	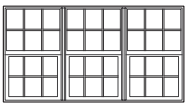 7-6/4-0	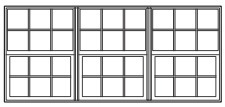 9-0/4-0
(1 372) (1 359)	4' 6"	53 1/2"	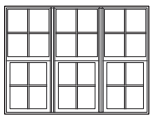 6-0/4-6	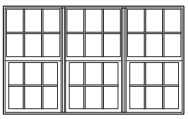 7-6/4-6	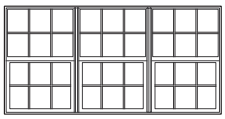 9-0/4-6
(1 524) (1 511)	5' 0"	59 1/2"	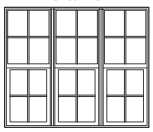 6-0/5-0	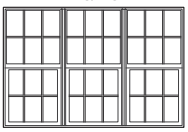 7-6/5-0	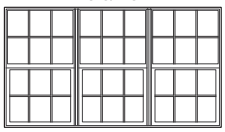 9-0/5-0 E1
(1 676) (1 664)	5' 6"	65 1/2"	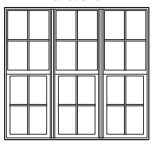 6-0/5-6	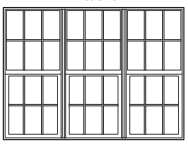 7-6/5-6 E1
(1 829) (1 816)	6' 0"	71 1/2"	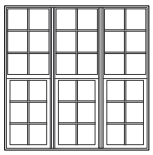 6-0/6-0	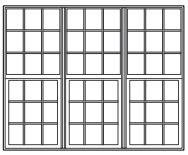 7-6/6-0 E1

Egress Notes:

Check all applicable local codes for emergency egress requirements.

E = Window meets minimum clear opening of 24" height, 20" width, and 5.7 ft².

E1 = Window meets minimum clear opening of 24" height, 20" width, and 5.0 ft².

See Design Data pages in this section for clear opening dimensions.

Not to scale.

West Region Only

Encompass by Pella® Single-Hung Window

Frame Size Dimensions Curved Shapes – East Region

Springline

	Equal Sash		24" Sash		30" Sash		36" Sash	
	Min	Max	Min	Max	Min	Max	Min	Max
Frame Width (W)	29-1/2	48	29-1/2	48	29-1/2	48	29-1/2	48
Frame Height (H)	38-1/4	71-1/2	S + W÷2	84	S + W÷2	84	S + W÷2	84
Short Leg Height (S)	25-1/2	H - W÷2	47-5/8	H - W÷2	59-5/8	H - W÷2	71-5/8	H - W÷2
Radius (R1)	14-3/4	24	14-3/4	24	14-3/4	24	14-3/4	24

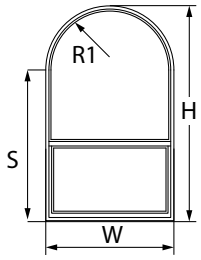

Arch-Head

	Equal Sash		24" Sash		30" Sash		36" Sash	
	Min	Max	Min	Max	Min	Max	Min	Max
Frame Width (W)	23-1/2	48	23-1/2	48	23-1/2	48	23-1/2	48
Frame Height (H)	> S	71-1/2	> S	84	>S	84	>S	84
Short Leg Height (S)	25-1/2	<H	47-5/8	< H	59-5/8	< H	71-5/8	< H
Radius (R1)	14-3/4	–	14-3/4	–	14-3/4	–	14-3/4	–

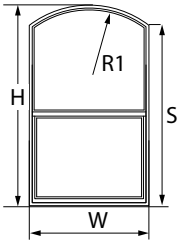

Half Springline

	Equal Sash		24" Sash		30" Sash		36" Sash	
	Min	Max	Min	Max	Min	Max	Min	Max
Frame Width (W)	23-1/2	48	23-1/2	48	23-1/2	48	23-1/2	48
Frame Height (H)	47-1/2	84	S + W	84	S + W	84	S + W	84
Short Leg Height (S)	25-1/2	H - W	47-5/8	H - W	59-5/8	H - W	71-5/8	H - W
Radius (R1)	23-1/2	48	23-1/2	48	23-1/2	48	23-1/2	48

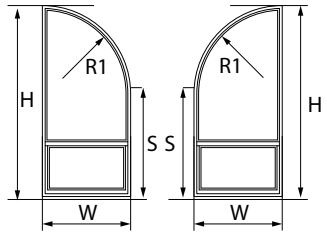

Right Left

Partial Arch-Head

	Equal Sash		24" Sash		30" Sash		36" Sash	
	Min	Max	Min	Max	Min	Max	Min	Max
Frame Width (W)	23-1/2	48	23-1/2	48	23-1/2	48	23-1/2	48
Frame Height (H)	> S	84	> S	84	> S	84	> S	84
Short Leg Height (S)	25-1/2	< H	47-5/8	< H	59-5/8	< H	71-5/8	< H
Radius (R1)	14-3/4	–	14-3/4	–	14-3/4	–	14-3/4	–

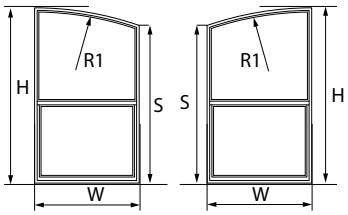

Right Left

East Region Only

Encompass by Pella® vinyl window products are intended only for use less than 40 feet above ground level.

All dimensions are in inches unless otherwise noted.

Encompass by Pella® Single-Hung Window

Special Size Frame Dimensions - East Region

Single Vent Unit

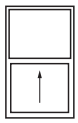

MINIMUM
14-1/2" W x 23-1/2" H
(368 x 597)

MAXIMUM
48" W x 71-1/2" H
(1 219 x 1 816)

2-Wide Vent Unit Composite

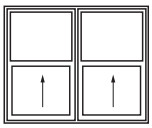

MINIMUM
29-1/2" W x 23-1/2" H
(749 x 597)

MAXIMUM
48 ft² (4.46 m²)
96-1/2" W x 71-1/2" H
(2 451 x 1 816)

3-Wide (Equal) Vent Unit Composite

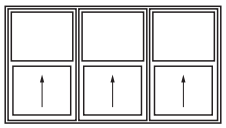

MINIMUM
44-1/2" W x 23-1/2" H
(1 130 x 597)

MAXIMUM
48 ft² (4.46 m²)
107-1/2" W x 71-1/2" H
(2 730 x 1 816)

3-Wide (Unequal) Vent Unit Composite

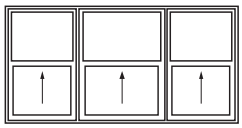

MINIMUM
44-1/2" W x 23-1/2" H
(1 130 x 597)

MAXIMUM
48 ft² (4.46 m²)
107-1/2" W x 71-1/2" H
(2 730 x 1 816)

Fixed Over single Composite

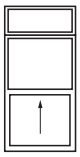

MINIMUM
14-1/2" W x 35-1/2" H
(368 x 902)

MAXIMUM
48" W x 95-1/2" H
(1 219 x 2 426)

Single 24" Vent Unit

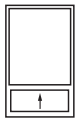

MINIMUM
14-1/2" W x 47-1/2" H
(368 x 1 461)

MAXIMUM
48" W x 84" H
(1 219 x 2 134)

2-Wide 24" Vent Unit Composite

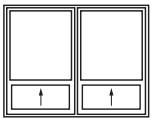

MINIMUM
29-1/2" W x 47-1/2" H
(749 x 1 461)

MAXIMUM
48 ft² (4.46 m²)
96-1/2" W x 84" H
(2 451 x 2 143)

3-Wide 24" Vent Unit Composite

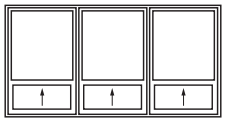

MINIMUM
44-1/2" W x 47-1/2" H
(1 130 x 597)

MAXIMUM
48 ft² (4.46 m²)
108" W x 71-1/2" H
(2 743 x 1 816)

Single 30" Vent Unit

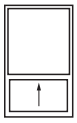

MINIMUM
14-1/2" W x 59-1/2" H
(368 x 1 816)

MAXIMUM
48" W x 84" H
(1 219 x 2 134)

2-Wide 30" Vent Unit Composite

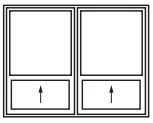

MINIMUM
29-1/2" W x 59-1/2" H
(749 x 1 816)

MAXIMUM
48 ft² (4.46 m²)
96-1/2" W x 84" H
(2 451 x 2 143)

3-Wide 30" Vent Unit Composite

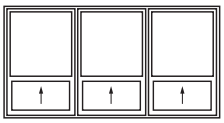

MINIMUM
44-1/2" W x 59-1/2" H
(1 130 x 1 816)

MAXIMUM
48 ft² (4.46 m²)
108" W x 71-1/2" H
(2 743 x 1 816)

Fixed with Vent Flankers Unit Composite

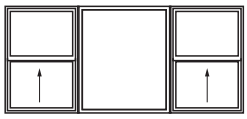

MINIMUM
44-1/2" W x 23-1/2" H
(1 130 x 597)

MAXIMUM
48 ft² (4.46 m²)
108" W x 71-1/2" H
(2 451 X 1 816)
Center Unit Width ≤ 59-1/2"

Single 36" Vent Unit

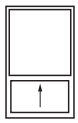

MINIMUM
14-1/2" W x 71-1/2" H
(368 x 1 816)

MAXIMUM
48" W x 71-1/2" H
(1 219 x 1 816)

2-Wide 36" Vent Unit Composite

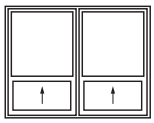

MINIMUM
29-1/2" W x 71-1/2" H
(749 x 1 816)

MAXIMUM
48 ft² (4.46 m²)
96-1/2" W x 71-1/2" H
(2 451 x 1 816)

3-Wide 36" Vent Unit Composite

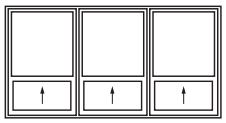

MINIMUM
44-1/2" W x 71-1/2" H
(1 130 x 1 816)

MAXIMUM
48 ft² (4.46 m²)
108" W x 71-1/2" H
(2 743 x 1 816)

General Notes:

- The fixed upper sash of single-hung units will vary in height for 24" or 36" lower sash venting units.
- Rough Opening–Frame Dimension + 1/2".
- Keep frame dimensions to the nearest 1/8" increment.
- Maximum frame area = 48 ft².
- Fixed Over 1-Wide–Maximum frame area of top fixed unit = 24 ft².
- For a Fixed Center Unit - Height cannot exceed 71-1/2" and Width cannot exceed 59-1/2".
- Frame dimension cannot exceed 80" in both directions.
- If glass width-height ratio is > 5:1, then unit must be tempered.
- 2-Wide High Performance limited to 71-1/2" x 66-1/2".
- 2-Wide and 3-Wide units are composites with multiple windows in one frame with integral mullions.
- Bronze glass is limited to 22 ft² glass size (actual glass).
- Tempered glass must measure > 18-1/2 diagonally.
- Single units with Frame Height of 59-1/2'' or greater and frame width of 29-1/2'' or greater are available with a dry-wall pass through option.
- Two wide composites with individual units of frame size greater or equal to 29-1/2'' x 59-1/2'' and less than or equal to 35-1/2'' x 71-1/2'' are available with a dry-wall pass through option.

East Region Only

Encompass by Pella® vinyl window products are intended only for use less than 40 feet above ground level.

Encompass by Pella® Single-Hung Window

Special Size Frame Dimensions - West Region

1-Wide Vent Unit

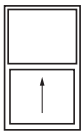

MINIMUM
14-1/2" W x 29-1/2" H
(368 x 597)

MAXIMUM
48" W x 84" H
(1 219 x 2 145)

2-Wide Vent Unit Composite

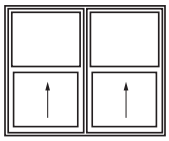

MINIMUM
29-1/2" W x 29-1/2" H
(749 x 597)

MAXIMUM
48 ft² (4.46 m²)
96-1/2" W x 71-1/2" H
(2 451 x 1 816)
or 82-1/2" W x 82-1/2" H
(2 096 x 2 121)

3-Wide (Equal) Vent Unit Composite

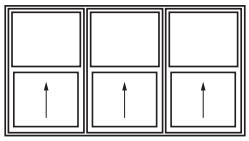

MINIMUM
44-1/2" W x 29-1/2" H
(1 130 x 597)

MAXIMUM
48 ft² (4.46 m2)
107-1/2" W x 71-1/2" H
(2 730 x 1 816)

Fixed Over 1-Wide Composite

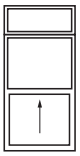

MINIMUM
14-1/2" W x 41-1/2"H
(368 x 1054)

MAXIMUM
32 ft² (2.97 m²)
48" W x 95-1/2" H
(1 219 x 2 426)

1-Wide 24" Vent Unit

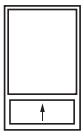

MINIMUM
14-1/2" W x 57-1/2" H
(368 x 1 308)

MAXIMUM
48" W x 84" H
(1 219 x 2 134)

2-Wide 24" Vent Unit Composite

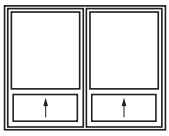

MINIMUM
29-1/2" W x 57-1/2" H
(749 x 1 461)

MAXIMUM
48 ft² (4.46 m²)
96-1/2" W x 71-1/2" H
(2 451 x 1 816)

3-Wide 24" Vent Unit Composite

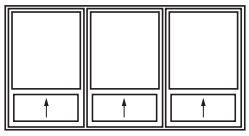

MINIMUM
44-1/2" W x 57-1/2" H
(1 130 x 597)

MAXIMUM
48 ft² (4.46 m²)
108" W x 71-1/2" H
(2 743 x 1 816)

3-wide fixed with flanker

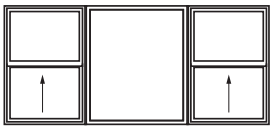

MINIMUM
44-1/2" W x 29-1/2" H
(1 130 x 597)

MAXIMUM
48 ft² (4.46 m²)
108" W x 71-1/2" H
(2 451 X 1 816)
Center Unit Width ≤ 59-1/2"

1-Wide 36" Vent Unit

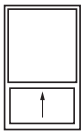

MINIMUM
14-1/2" W x 71-1/2" H
(368 x 1 816)

MAXIMUM
48" W x 84" H
(1 219 x 2 134)

2-Wide 36" Vent Unit Composite

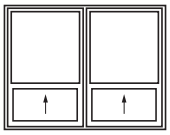

MINIMUM
29-1/2" W x 71-1/2" H
(749 x 1 816)

MAXIMUM
48 ft² (4.46 m²)
96-1/2" W x 71-1/2" H
(2 451 x 1 816)
or 82-1/2" W x 84" H
(2 096 x 2 134)

3-Wide 36" Vent Unit Composite

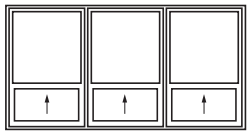

MINIMUM
44-1/2" W x 71-1/2" H
(1 130 x 1 816)

MAXIMUM
48 ft² (4.46 m²)
108" W x 71-1/2" H
(2 743 x 1 816)

West Region Only

General Notes:

- Three-wide and Fixed over 1-wide composite units are not AAMA/WDMA performance certified.
- The fixed upper sash of single-hung units will vary in height for 24" or 36" venting units
- To convert areas to square meters (m²), multiply square feet by 0.0929
- Rough Opening = Frame Dimension + 1/2"
- Keep frame dimensions to the nearest 1/8" increment
- Fixed Over Single–Maximum frame area of top fixed unit = 24 ft²
- Frame dimension cannot exceed 80" in both directions
- If glass width-height ratio is > 5:1, then unit must be tempered
- 2-Wide and 3-Wide vent units are composites with integral mullions.
- Bronze glass is limited to 22 ft² glass size (actual glass)

Rain Obscure Glass Limitations:

- Single vent units: Frame width must be ≤ 36".
- Two wide vent unit composites: Frame must be ≤ 72". Overall composite must be ≤ 32 ft².
- Three wide vent composites: Frame must be ≤ 108". Overall composite must be ≤ 32 ft².

Encompass by Pella® vinyl window products are intended only for use less than 40 feet above ground level.

Encompass by Pella® Single-Hung Window

Miscellaneous Formulas - East Region

		Sash Configuration	1-Wide Vent	2-Wide Vent	3-Wide Vent
Visible Glass	Upper	All	VUGW = FW – 3.125"	VUGW = (FW ÷ 2) – 3.25"	VUGW = (FW ÷ 3) – 3.3125"
		Equal	VUGH = (FH ÷ 2) – 3.4375"	VUGH = (FH ÷ 2) – 3.4375"	VUGH = (FH ÷ 2) – 3.4375"
		Unequal	VUGH = FH - VLGH – 6.875"	VUGH = FH - VLGH – 6.875"	VUGH = FH - VLGH – 6.875"
	Lower	All	VLGW = FW – 4.5"	VLGW = FW – 3.25"	VLGW = (FW ÷ 3) – 3.3125"
		Equal	VLGH = (FH ÷ 2) – 3.4375"	VLGH = (FH ÷ 2) – 3.4375"	VLGH = (FH ÷ 2) – 3.4375"
		24"	VLGH = 20.313	VLGH = 20.313	VLGH = 20.313
		30"	VLGH = 26.313	VLGH = 26.313	VLGH = 26.313
		36"	VLGH = 32.313	VLGH = 32.313	VLGH = 32.313
Actual Glass	Upper	All	AGW = FW – 2"	AGW = FW – 2-1/4"	AGW = (FW ÷ 3) – 2.3125"
		Equal	AUGH = (FH ÷ 2) – 2.1875"	AUGH = (FH ÷ 2) – 2.1875"	AUGH = (FH ÷ 2) – 2.1875"
		Unequal	AUGH = FH - ALGH – 4.375"	AUGH = FH - ALGH – 4.375"	AUGH = FH - ALGH – 4.375"
	Lower	All	ALGW = FW – 3.5"	ALGW = (FW ÷ 2) – 3.75"	ALGW = (FW ÷ 3) – 3.8125"
		Equal	ALGH = (FH ÷ 2) – 2.1875"	ALGH = (FH ÷ 2) – 2.1875"	ALGH = (FH ÷ 2) – 2.1875"
		24"	ALGH = 21.526	ALGH = 21.526	ALGH = 21.526
		30"	ALGH = 27.526	ALGH = 27.526	ALGH = 27.526
		36"	ALGH = 33.526	ALGH = 33.526	ALGH = 33.526

		Sash Configuration	Fixed over 1-Wide Vent
Actual Glass	Fixed		AUGW = FW – 2" AUGH = Top Unit Height – 2"
	Upper	All	AUGW = FW – 2"
		Equal	AUGH = (Bottom Unit Height ÷ 2) – 2.125"
		Unequal	AUGH = Bottom Unit Height - ALGH – 4.375"
	Lower	All	ALGW = FW – 3.5"
		Equal	ALGH = (Bottom Unit Height ÷ 2) – 2.125"
		24"	ALGW = 21.526
		30"	ALGW = 27.526
		36"	ALGW = 33.526

KEY:

AGW = Actual Glass Width
AGH = Actual Glass Height
ALGH = Actual Lower Sash Glass Height
AUGH = Actual Upper Sash Glass Height
COW = Clear Opening Width
COH = Clear Opening Height
CUW = Center Unit Width
FUW = Flanker Unit Width
FW = Frame Width
FH = Frame Height
VGW = Visible Glass Width
VGH = Visible Glass Height
VLGH = Visible Lower Sash Glass Height
VUGH = Visible Upper Sash Glass Height
FUW = FW – CUW – 1

	1-Wide Vent	2-Wide Vent	3-Wide Vent
Clear Opening	COW = FW – 3.125"	COW = FW ÷ 2 - 3.375"	COW = FW ÷ 3 - 3.375"
	COH (Equal) = FH ÷ 2 – 3.5625"	COH (Equal) = FH ÷ 2 – 3.5625"	COH (Equal) = FH ÷ 2 – 3.5625"
	COH (24" Vent) = 20.625"	COH (24" Vent) = 20.625"	COH (24" Vent) = 20.625"
	COH (30" Vent) = 26.625"	COH (30" Vent) = 26.625"	COH (30" Vent) = 26.625"
	COH (36" Vent) = 32.625"	COH (36" Vent) = 32.625"	COH (36" Vent) = 32.625"
	(COW x COH) ÷ 144 = Area ft²		

Fixed with Single-Hung Flankers

Actual Glass	Flanker Fixed Upper	AGW = FUW – 2" AGH = (FH ÷ 2) – 2.1875"
	Flanker Fixed Lower	AGW = FUW – 2" AGH = (FH ÷ 2) – 2.1875"
	Fixed Center Unit	AGW = CUW – 2" AGH = FH – 2"

Clear Opening	COW = FUW – 3.125" COH = FH ÷ 2 – 3.125" (COW x COH) ÷ 144 = Area ft²

Encompass by Pella® vinyl window products are intended only for use less than 40 feet above ground level.

East Region Only

Encompass by Pella® Single-Hung Window

Miscellaneous Formulas - West Region

		1-Wide Vent Unit	2-Wide 1/2-Vent Unit	3-Wide Vent Unit
Visible Glass	Upper	VGW = FW – 3" VGH = (FH ÷ 2) – 3.25"	VGW = (FH ÷ 2) – 3.25" VGH = (FH ÷ 2) – 3.25"	VGW = (FH ÷ 3) – 3.3125" VGH = (FH ÷ 2) – 3.25"
	Lower	VGW = FW – 5.3125" VGH = (FH ÷ 2) – 3.875"	VGW = FW – 5.5625" VGH = (FH ÷ 2) – 3.875"	VGW = (FH ÷ 3) – 5.625" VGH = (FH ÷ 2) – 3.875"
Actual Glass	Upper	AGW = FW – 2" AGH = (FH ÷ 2) – 3.25"	AGW = FW – 2.25" AGH = (FH ÷ 2) – 3.25"	AGW = (FH ÷ 3) – 2.3125" AGH = (FH ÷ 2) – 3.25"
	Lower	AGW = FW – 4.3125" AGH = (FH ÷ 2) – 2.875"	AGW = (FW ÷ 2) – 4.5625" AGH = (FH ÷ 2) – 2.875"	AGW = (FH ÷ 3) – 4.625" AGH = (FH ÷ 2) – 2.875"

	1-Wide Vent Unit
Clear Opening	COW = FW – 3" COH = (FH ÷ 2) – 4.4375"

		Fixed over 1-Wide Vent Unit
Actual Glass	Fixed Upper	AGW = FW – 2" AGH = Top Unit Height – 2"
	Upper	AGW = FW – 2" AGH = (Bottom Unit Height ÷ 2) – 2.25"
	Lower	AGW = FW – 4.3125" AGH = (Bottom Unit Height ÷ 2) – 2.875"

KEY:

AGW = Actual Glass Width
AGH = Actual Glass Height
COW = Clear Opening Width
COH = Clear Opening Height
CUW = Center Unit Width
FUW = Flanker Unit Width
FW = Frame Width
FH = Frame Height
VGW = Visible Glass Width
VGH = Visible Glass Height
FUW = FW – CUW – 1

Encompass by Pella® vinyl window products are intended only for use less than 40 feet above ground level.

West Region Only

1-Wide Equal Sash - 2-11/16" Frame (East Region)

Unit	Egress	Frame (Inches)		Clear Opening (inches) (Vent Units Only)			Vent Area Ft²	Visible Glass Ft²	Standard Glass Thickness (mm)		Performance Class & Grade [1]	
		Width	Height	Width	Height	Ft²			Annealed	Tempered	Standard	Upgrade [2]
2-0/3-0		23-1/2	35-1/2	20-3/8	14-3/16	2.0	2.0	3.9	2.5	3	R35	R50
2-0/3-2		23-1/2	37-1/2	20-3/8	15-3/16	2.1	2.1	4.2	2.5	3	R35	R50
2-0/3-6		23-1/2	41-1/2	20-3/8	17-3/16	2.4	2.4	4.7	2.5	3	R35	R50
2-0/3-10		23-1/2	45-1/2	20-3/8	19-3/16	2.7	2.7	5.3	2.5	3	R35	R50
2-0/4-0		23-1/2	47-1/2	20-3/8	20-3/16	2.9	2.9	5.6	2.5	3	R35	R50
2-0/4-4		23-1/2	51-1/2	20-3/8	22-3/16	3.1	3.1	6.1	2.5	3	R35	R50
2-0/4-6		23-1/2	53-1/2	20-3/8	23-3/16	3.3	3.3	6.4	2.5	3	R35	R50
2-0/5-0		23-1/2	59-1/2	20-3/8	26-3/16	3.7	3.7	7.2	2.5	3	R35	R50
2-0/5-2		23-1/2	61-1/2	20-3/8	27-3/16	3.8	3.8	7.5	2.5	3	R35	R50
2-0/5-6		23-1/2	65-1/2	20-3/8	29-3/16	4.1	4.1	8.0	2.5	3	R35	R50
2-0/6-0		23-1/2	71-1/2	20-3/8	32-3/16	4.6	4.6	8.8	2.5	3	R35	R50
2-4/3-0		27-1/2	35-1/2	24-3/8	14-3/16	2.4	2.4	4.7	2.5	3	R35	R50
2-4/3-2		27-1/2	37-1/2	24-3/8	15-3/16	2.6	2.6	5.0	2.5	3	R35	R50
2-4/3-6		27-1/2	41-1/2	24-3/8	17-3/16	2.9	2.9	5.7	2.5	3	R35	R50
2-4/3-10		27-1/2	45-1/2	24-3/8	19-3/16	3.2	3.2	6.4	2.5	3	R35	R50
2-4/4-0		27-1/2	47-1/2	24-3/8	20-3/16	3.4	3.4	6.7	2.5	3	R35	R50
2-4/4-4		27-1/2	51-1/2	24-3/8	22-3/16	3.8	3.8	7.3	2.5	3	R35	R50
2-4/4-6		27-1/2	53-1/2	24-3/8	23-3/16	3.9	3.9	7.7	2.5	3	R35	R50
2-4/5-0		27-1/2	59-1/2	24-3/8	26-3/16	4.4	4.4	8.7	2.5	3	R35	R50
2-4/5-2		27-1/2	61-1/2	24-3/8	27-3/16	4.6	4.6	9.0	2.5	3	R35	R50
2-4/5-6		27-1/2	65-1/2	24-3/8	29-3/16	4.9	4.9	9.6	2.5	3	R35	R50
2-4/6-0	E1	27-1/2	71-1/2	24-3/8	32-3/16	5.4	5.4	10.6	2.5	3	R35	R50
2-6/3-0		29-1/2	35-1/2	26-3/8	14-3/16	2.6	2.6	5.1	2.5	3	R35	R50
2-6/3-2		29-1/2	37-1/2	26-3/8	15-3/16	2.8	2.8	5.5	2.5	3	R35	R50
2-6/3-6		29-1/2	41-1/2	26-3/8	17-3/16	3.1	3.1	6.2	2.5	3	R35	R50
2-6/3-10		29-1/2	45-1/2	26-3/8	19-3/16	3.5	3.5	6.9	2.5	3	R35	R50
2-6/4-0		29-1/2	47-1/2	26-3/8	20-3/16	3.7	3.7	7.2	2.5	3	R35	R50
2-6/4-4		29-1/2	51-1/2	26-3/8	22-3/16	4.1	4.1	8.0	2.5	3	R35	R50
2-6/4-6		29-1/2	53-1/2	26-3/8	23-3/16	4.2	4.2	8.3	2.5	3	R35	R50
2-6/5-0		29-1/2	59-1/2	26-3/8	26-3/16	4.8	4.8	9.4	2.5	3	R35	R50
2-6/5-2		29-1/2	61-1/2	26-3/8	27-3/16	5.0	5.0	9.7	2.5	3	R35	R50
2-6/5-6	E1	29-1/2	65-1/2	26-3/8	29-3/16	5.3	5.3	10.5	2.5	3	R35	R50
2-6/6-0	E	29-1/2	71-1/2	26-3/8	32-3/16	5.9	5.9	11.5	2.5	3	R35	R50
2-8/3-0		31-1/2	35-1/2	28-3/8	14-3/16	2.8	2.8	5.5	2.5	3	R35	R50
2-8/3-2		31-1/2	37-1/2	28-3/8	15-3/16	3.0	3.0	5.9	2.5	3	R35	R50
2-8/3-6		31-1/2	41-1/2	28-3/8	17-3/16	3.4	3.4	6.7	2.5	3	R35	R50
2-8/3-10		31-1/2	45-1/2	28-3/8	19-3/16	3.8	3.8	7.4	2.5	3	R35	R50
2-8/4-0		31-1/2	47-1/2	28-3/8	20-3/16	4.0	4.0	7.8	2.5	3	R35	R50
2-8/4-4		31-1/2	51-1/2	28-3/8	22-3/16	4.4	4.4	8.6	2.5	3	R35	R50
2-8/4-6		31-1/2	53-1/2	28-3/8	23-3/16	4.6	4.6	9.0	2.5	3	R35	R50
2-8/5-0	E1	31-1/2	59-1/2	28-3/8	26-3/16	5.2	5.2	10.1	2.5	3	R35	R50
2-8/5-2	E1	31-1/2	61-1/2	28-3/8	27-3/16	5.4	5.4	10.5	2.5	3	R35	R50
2-8/5-6	E	31-1/2	65-1/2	28-3/8	29-3/16	5.8	5.8	11.3	2.5	3	R35	R50
2-8/6-0	E	31-1/2	71-1/2	28-3/8	32-3/16	6.3	6.3	12.4	2.5	3	R35	R50

Egress Notes:

Check all applicable local codes for emergency egress requirements.

E = Window meets minimum clear opening of 24" height, 20" width, and 5.7 ft².

E1 = Window meets minimum clear opening of 24" height, 20" width, and 5.0 ft².

Encompass by Pella® vinyl window products are intended only for use less than 40 feet above ground level.

East Region Only

(1) Maximum performance when glazed with the appropriate glass thickness.

(2) Performance with additional steel reinforcement in sash cavity.

To convert areas to square meters (m²), multiply square feet by 0.0929

1-Wide Equal Sash - 2-11/16" Frame (East Region)

Unit	Egress	Frame (Inches)		Clear Opening (inches) (Vent Units Only)			Vent Area Ft²	Visible Glass Ft²	Standard Glass Thickness (mm)		Performance Class & Grade [1]	
		Width	Height	Width	Height	Ft²			Annealed	Tempered	Standard	Upgrade [2]
3-0/3-0		35-1/2	35-1/2	32-3/8	14-3/16	3.2	3.2	6.3	2.5	3	R35	R50
3-0/3-2		35-1/2	37-1/2	32-3/8	15-3/16	3.4	3.4	6.7	2.5	3	R35	R50
3-0/3-6		35-1/2	41-1/2	32-3/8	17-3/16	3.9	3.9	7.6	2.5	3	R35	R50
3-0/3-10		35-1/2	45-1/2	32-3/8	19-3/16	4.3	4.3	8.5	2.5	3	R35	R50
3-0/4-0		35-1/2	47-1/2	32-3/8	20-3/16	4.5	4.5	8.9	2.5	3	R35	R50
3-0/4-4		35-1/2	51-1/2	32-3/8	22-3/16	5.0	5.0	9.8	2.5	3	R35	R50
3-0/4-6		35-1/2	53-1/2	32-3/8	23-3/16	5.2	5.2	10.3	2.5	3	R35	R50
3-0/5-0	E	35-1/2	59-1/2	32-3/8	26-3/16	5.9	5.9	11.6	2.5	3	R35	R50
3-0/5-2	E	35-1/2	61-1/2	32-3/8	27-3/16	6.1	6.1	12.0	2.5	3	R35	R50
3-0/5-6	E	35-1/2	65-1/2	32-3/8	29-3/16	6.6	6.6	12.9	2.5	3	R35	R50
3-0/6-0	E	35-1/2	71-1/2	32-3/8	32-3/16	7.2	7.2	14.2	2.5	3	R35	R50
3-4/3-0		39-1/2	35-1/2	36-3/8	14-3/16	3.6	3.6	7.1	2.5	3	R35	R50
3-4/3-2		39-1/2	37-1/2	36-3/8	15-3/16	3.8	3.8	7.6	2.5	3	R35	R50
3-4/3-6		39-1/2	41-1/2	36-3/8	17-3/16	4.3	4.3	8.6	2.5	3	R35	R50
3-4/3-10		39-1/2	45-1/2	36-3/8	19-3/16	4.8	4.8	9.6	2.5	3	R35	R50
3-4/4-0		39-1/2	47-1/2	36-3/8	20-3/16	5.1	5.1	10.1	2.5	3	R35	R50
3-4/4-4		39-1/2	51-1/2	36-3/8	22-3/16	5.6	5.6	11.1	2.5	3	R35	R50
3-4/4-6		39-1/2	53-1/2	36-3/8	23-3/16	5.9	5.9	11.6	2.5	3	R35	R50
3-4/5-0	E	39-1/2	59-1/2	36-3/8	26-3/16	6.6	6.6	13.0	2.5	3	R35	R50
3-4/5-2	E	39-1/2	61-1/2	36-3/8	27-3/16	6.9	6.9	13.5	2.5	3	R35	R50
3-4/5-6	E	39-1/2	65-1/2	36-3/8	29-3/16	7.4	7.4	14.5	2.5	3	R35	R50
3-4/6-0	E	39-1/2	71-1/2	36-3/8	32-3/16	8.1	8.1	16.0	2.5	3	R35	R50
4-0/3-0		47-1/2	35-1/2	44-3/8	14-3/16	4.4	4.4	8.7	2.5	3	R35	–
4-0/3-2		47-1/2	37-1/2	44-3/8	15-3/16	4.7	4.7	9.3	2.5	3	R35	–
4-0/3-6		47-1/2	41-1/2	44-3/8	17-3/16	5.3	5.3	10.5	2.5	3	R35	–
4-0/3-10		47-1/2	45-1/2	44-3/8	19-3/16	5.9	5.9	11.7	2.5	3	R35	–
4-0/4-0		47-1/2	47-1/2	44-3/8	20-3/16	6.2	6.2	12.3	2.5	3	R35	–
4-0/4-4		47-1/2	51-1/2	44-3/8	22-3/16	6.8	6.8	13.5	2.5	3	R35	–
4-0/4-6		47-1/2	53-1/2	44-3/8	23-3/16	7.1	7.1	14.1	2.5	3	R35	–
4-0/5-0	E	47-1/2	59-1/2	44-3/8	26-3/16	8.1	8.1	16.0	2.5	3	R35	–
4-0/5-2	E	47-1/2	61-1/2	44-3/8	27-3/16	8.4	8.4	16.6	2.5	3	R35	–
4-0/5-6	E	47-1/2	65-1/2	v44-3/8	29-3/16	9.0	9.0	17.8	2.5	3	R35	–
4-0/6-0	E	47-1/2	71-1/2	44-3/8	32-3/16	9.9	9.9	19.6	2.5	3	R35	–

Egress Notes:

Check all applicable local codes for emergency egress requirements.

E = Window meets minimum clear opening of 24" height, 20" width, and 5.7 ft².

Encompass by Pella® vinyl window products are intended only for use less than 40 feet above ground level.

East Region Only

(–) = Not Available

(1) Maximum performance when glazed with the appropriate glass thickness.

(2) Performance with additional steel reinforcement in sash cavity.

To convert areas to square meters (m²), multiply square feet by 0.0929

2-Wide Equal Sash - 2-11/16" Frame (East Region)

Unit	Egress	Frame (Inches)		Clear Opening (inches) (Vent Units Only)			Vent Area Ft²	Visible Glass Ft²	Standard Glass Thickness (mm)		Performance Class & Grade [1]	
		Width	Height	Width	Height	Ft²			Annealed	Tempered	Standard	Upgrade [2]
4-0/3-0		47-1/2	35-1/2	20-3/8	14-3/16	2.0	4.0	8.1	2.5	3	R35	R50
4-0/3-2		47-1/2	37-1/2	20-3/8	15-3/16	2.2	4.3	8.7	2.5	3	R35	R50
4-0/3-6		47-1/2	41-1/2	20-3/8	17-3/16	2.4	4.9	9.8	2.5	3	R35	R50
4-0/3-10		47-1/2	45-1/2	20-3/8	19-3/16	2.7	5.4	11.0	2.5	3	R35	R50
4-0/4-0		47-1/2	47-1/2	20-3/8	20-3/16	2.9	5.7	11.5	2.5	3	R35	R50
4-0/4-4		47-1/2	51-1/2	20-3/8	22-3/16	3.1	6.3	12.7	2.5	3	R35	R50
4-0/4-6		47-1/2	53-1/2	20-3/8	23-3/16	3.3	6.6	13.2	2.5	3	R35	R50
4-0/4-8		47-1/2	59-1/2	20-3/8	26-3/16	3.7	7.4	14.9	2.5	3	R35	R50
4-0/5-2		47-1/2	61-1/2	20-3/8	27-3/16	3.9	7.7	15.5	2.5	3	R35	R50
4-0/5-6		47-1/2	65-1/2	20-3/8	29-3/16	4.1	8.3	16.6	2.5	3	R35	R50
4-0/6-0		47-1/2	71-1/2	20-3/8	32-3/16	4.6	9.1	18.3	2.5	3	R35	–
4-8/3-0		55-1/2	35-1/2	24-3/8	14-3/16	2.4	4.8	9.7	2.5	3	R35	R50
4-8/3-2		55-1/2	37-1/2	24-3/8	15-3/16	2.6	5.2	10.4	2.5	3	R35	R50
4-8/3-6		55-1/2	41-1/2	24-3/8	17-3/16	2.9	5.8	11.8	2.5	3	R35	R50
4-8/3-10		55-1/2	45-1/2	24-3/8	19-3/16	3.3	6.5	13.1	2.5	3	R35	R50
4-8/4-0		55-1/2	47-1/2	24-3/8	20-3/16	3.4	6.9	13.8	2.5	3	R35	R50
4-8/4-4		55-1/2	51-1/2	24-3/8	22-3/16	3.8	7.5	15.1	2.5	3	R35	R50
4-8/4-6		55-1/2	53-1/2	24-3/8	23-3/16	3.9	7.9	15.8	2.5	3	R35	R50
4-8/5-0		55-1/2	59-1/2	24-3/8	26-3/16	4.4	8.9	17.9	2.5	3	R35	R50
4-8/5-2		55-1/2	61-1/2	24-3/8	27-3/16	4.6	9.2	18.5	2.5	3	R35	R50
4-8/5-6	E1	55-1/2	65-1/2	24-3/8	29-3/16	5.0	9.9	19.9	2.5	3	R35	R50
4-8/6-0	E1	55-1/2	71-1/2	24-3/8	32-3/16	5.5	10.9	21.9	2.5	3	R35	–
5-0/3-0		59-1/2	35-1/2	26-3/8	14-3/16	2.6	5.2	10.5	2.5	3	R35	R50
5-0/3-2		59-1/2	37-1/2	26-3/8	15-3/16	2.8	5.6	11.2	2.5	3	R35	R50
5-0/3-6		59-1/2	41-1/2	26-3/8	17-3/16	3.2	6.3	12.7	2.5	3	R35	R50
5-0/3-10		59-1/2	45-1/2	26-3/8	19-3/16	3.5	7.1	14.2	2.5	3	R35	R50
5-0/4-0		59-1/2	47-1/2	26-3/8	20-3/16	3.7	7.4	14.9	2.5	3	R35	R50
5-0/4-4		59-1/2	51-1/2	26-3/8	22-3/16	4.1	8.2	16.4	2.5	3	R35	R50
5-0/4-6		59-1/2	53-1/2	26-3/8	23-3/16	4.3	8.5	17.1	2.5	3	R35	R50
5-0/5-0		59-1/2	59-1/2	26-3/8	26-3/16	4.8	9.6	19.3	2.5	3	R35	R50
5-0/5-2		59-1/2	61-1/2	26-3/8	27-3/16	5.0	10.0	20.1	2.5	3	R35	R50
5-0/5-6	E1	59-1/2	65-1/2	26-3/8	29-3/16	5.4	10.7	21.5	2.5	3	R35	R50
5-0/6-0	E	59-1/2	71-1/2	26-3/8	32-3/16	5.9	11.8	23.7	2.5	3	R35	–
5-4/3-0		63-1/2	35-1/2	28-3/8	14-3/16	2.8	5.6	11.3	2.5	3	R35	R50
5-4/3-2		63-1/2	37-1/2	28-3/8	15-3/16	3.0	6.0	12.1	2.5	3	R35	R50
5-4/3-6		63-1/2	41-1/2	28-3/8	17-3/16	3.4	6.8	13.7	2.5	3	R35	R50
5-4/3-10		63-1/2	45-1/2	28-3/8	19-3/16	3.8	7.6	15.3	2.5	3	R35	R50
5-4/4-0		63-1/2	47-1/2	28-3/8	20-3/16	4.0	8.0	16.0	2.5	3	R35	R50
5-4/4-4		63-1/2	51-1/2	28-3/8	22-3/16	4.4	8.8	17.6	2.5	3	R35	R50
5-4/4-6		63-1/2	53-1/2	28-3/8	23-3/16	4.6	9.2	18.4	2.5	3	R35	R50
5-4/5-0	E1	63-1/2	59-1/2	28-3/8	26-3/16	5.2	10.3	20.8	2.5	3	R35	R50
5-4/5-2	E1	63-1/2	61-1/2	28-3/8	27-3/16	5.4	10.7	21.6	2.5	3	R35	R50
5-4/5-6	E	63-1/2	65-1/2	28-3/8	29-3/16	5.8	11.5	23.2	2.5	3	R35	R50
5-4/6-0	E	63-1/2	71-1/2	28-3/8	32-3/16	6.4	12.7	25.5	2.5	3	R35	–

Egress Notes:

Check all applicable local codes for emergency egress requirements.

E = Window meets minimum clear opening of 24" height, 20" width, and 5.7 ft².

E1 = Window meets minimum clear opening of 24" height, 20" width, and 5.0 ft².

Encompass by Pella® vinyl window products are intended only for use less than 40 feet above ground level.

East Region Only

(–) = Not Available

(1) Maximum performance when glazed with the appropriate glass thickness.

(2) Second number indicates performance with additional steel reinforcement in sash cavity.

To convert areas to square meters (m²), multiply square feet by 0.0929

2-Wide Equal Sash - 2-11/16" Frame (East Region)

Unit	Egress	Frame (Inches)		Clear Opening (inches) (Vent Units Only)			Vent Area Ft²	Visible Glass Ft²	Standard Glass Thickness (mm)		Performance Class & Grade [1]	
		Width	Height	Width	Height	Ft²			Annealed	Tempered	Standard	Upgrade [2]
6-0/3-0		71-1/2	35-1/2	32-3/8	14-3/16	3.2	6.4	12.9	2.5	3	R35	R50
6-0/3-2		71-1/2	37-1/2	32-3/8	15-3/16	3.4	6.9	13.8	2.5	3	R35	R50
6-0/3-6		71-1/2	41-1/2	32-3/8	17-3/16	3.9	7.8	15.6	2.5	3	R35	R50
6-0/3-10		71-1/2	45-1/2	32-3/8	19-3/16	4.3	8.7	17.4	2.5	3	R35	R50
6-0/4-0		71-1/2	47-1/2	32-3/8	20-3/16	4.6	9.1	18.3	2.5	3	R35	R50
6-0/4-4		71-1/2	51-1/2	32-3/8	22-3/16	5.0	10.0	20.1	2.5	3	R35	R50
6-0/4-6		71-1/2	53-1/2	32-3/8	23-3/16	5.2	10.5	21.0	2.5	3	R35	R50
6-0/5-0	E	71-1/2	59-1/2	32-3/8	26-3/16	5.9	11.8	23.7	2.5	3	R35	R50
6-0/5-2	E	71-1/2	61-1/2	32-3/8	27-3/16	6.1	12.3	24.6	2.5	3	R35	R50
6-0/5-6	E	71-1/2	65-1/2	32-3/8	29-3/16	6.6	13.2	26.4	2.5	3	R35	R50
6-0/6-0	E	71-1/2	71-1/2	32-3/8	32-3/16	7.3	14.5	29.1	2.5	3	R35	–
6-8/3-0		79-1/2	35-1/2	36-3/8	14-3/16	3.6	7.2	14.5	2.5	3	R35	–
6-8/3-2		79-1/2	37-1/2	36-3/8	15-3/16	3.9	7.7	15.5	2.5	3	R35	–
6-8/3-6		79-1/2	41-1/2	36-3/8	17-3/16	4.4	8.7	17.5	2.5	3	R35	–
6-8/3-10		79-1/2	45-1/2	36-3/8	19-3/16	4.9	9.7	19.5	2.5	3	R35	–
6-8/4-0		79-1/2	47-1/2	36-3/8	20-3/16	5.1	10.2	20.6	2.5	3	R35	–
6-8/4-4		79-1/2	51-1/2	36-3/8	22-3/16	5.6	11.2	22.6	2.5	3	R35	–
6-8/4-6		79-1/2	53-1/2	36-3/8	23-3/16	5.9	11.7	23.6	2.5	3	R35	–
6-8/5-0	E	79-1/2	59-1/2	36-3/8	26-3/16	6.6	13.3	26.6	2.5	3	R35	–
6-8/5-2	E	79-1/2	61-1/2	36-3/8	27-3/16	6.9	13.8	27.6	2.5	3	R35	–
6-8/5-6	E	79-1/2	65-1/2	36-3/8	29-3/16	7.4	14.8	29.7	2.5	3	R35	–
6-8/6-0	E	79-1/2	71-1/2	36-3/8	32-3/16	8.1	16.3	32.7	2.5	3	R35	–

Egress Notes:

Check all applicable local codes for emergency egress requirements.

E = Window meets minimum clear opening of 24" height, 20" width, and 5.7 ft².

Encompass by Pella® vinyl window products are intended only for use less than 40 feet above ground level.

East Region Only

(–) = Not Available

(1) Maximum performance when glazed with the appropriate glass thickness.

(2) Second number indicates performance with additional steel reinforcement in sash cavity.

To convert areas to square meters (m²), multiply square feet by 0.0929

3-Wide Equal Sash - 2-11/16" Frame (East Region)

Unit	Egress	Frame (Inches)		Clear Opening (inches) (Vent Units Only)			Vent Area Ft²	Visible Glass Ft²	Standard Glass Thickness (mm)		Performance Class & Grade [1]
		Width	Height	Width	Height	Ft²			Annealed	Tempered	
6-0/3-0		71-1/2	35-1/2	20-3/8	14-3/16	2.0	6.0	12.3	2.5	3	R35
6-0/3-2		71-1/2	37-1/2	20-3/8	15-3/16	2.1	6.5	13.2	2.5	3	R35
6-0/3-6		71-1/2	41-1/2	20-3/8	17-3/16	2.4	7.3	14.9	2.5	3	R35
6-0/3-10		71-1/2	45-1/2	20-3/8	19-3/16	2.7	8.2	16.6	2.5	3	R35
6-0/4-0		71-1/2	47-1/2	20-3/8	20-3/16	2.8	8.6	17.4	2.5	3	R35
6-0/4-4		71-1/2	51-1/2	20-3/8	22-3/16	3.1	9.4	19.2	2.5	3	R35
6-0/4-6		71-1/2	53-1/2	20-3/8	23-3/16	3.3	9.8	20.0	2.5	3	R35
6-0/5-0		71-1/2	59-1/2	20-3/8	26-3/16	3.7	11.1	22.6	2.5	3	R35
6-0/5-2		71-1/2	61-1/2	20-3/8	27-3/16	3.8	11.5	23.5	2.5	3	R35
6-0/5-6		71-1/2	65-1/2	20-3/8	29-3/16	4.1	12.4	25.2	2.5	3	R35
6-0/6-0		71-1/2	71-1/2	20-3/8	32-3/16	4.5	13.7	27.8	2.5	3	R35
7-0/3-0		83-1/2	35-1/2	24-3/8	14-3/16	2.4	7.2	14.7	2.5	3	R35
7-0/3-2		83-1/2	37-1/2	24-3/8	15-3/16	2.5	7.7	15.7	2.5	3	R35
7-0/3-6		83-1/2	41-1/2	24-3/8	17-3/16	2.9	8.7	17.8	2.5	3	R35
7-0/3-10		83-1/2	45-1/2	24-3/8	19-3/16	3.2	9.8	19.8	2.5	3	R35
7-0/4-0		83-1/2	47-1/2	24-3/8	20-3/16	3.4	10.3	20.8	2.5	3	R35
7-0/4-4		83-1/2	51-1/2	24-3/8	22-3/16	3.7	11.3	22.9	2.5	3	R35
7-0/4-6		83-1/2	53-1/2	24-3/8	23-3/16	3.9	11.8	23.9	2.5	3	R35
7-0/5-0		83-1/2	59-1/2	24-3/8	26-3/16	4.4	13.3	27.0	2.5	3	R35
7-0/5-2		83-1/2	61-1/2	24-3/8	27-3/16	4.6	13.8	28.0	2.5	3	R35
7-0/5-6		83-1/2	65-1/2	24-3/8	29-3/16	4.9	14.8	30.1	2.5	3	R35
7-0/6-0	E1	83-1/2	71-1/2	24-3/8	32-3/16	5.4	16.3	33.1	2.5	3	R35
7-6/3-0		89-1/2	35-1/2	26-3/8	14-3/16	2.6	7.8	15.9	2.5	3	R35
7-6/3-2		89-1/2	37-1/2	26-3/8	15-3/16	2.8	8.4	17.0	2.5	3	R35
7-6/3-6		89-1/2	41-1/2	26-3/8	17-3/16	3.1	9.5	19.2	2.5	3	R35
7-6/3-10		89-1/2	45-1/2	26-3/8	19-3/16	3.5	10.6	21.4	2.5	3	R35
7-6/4-0		89-1/2	47-1/2	26-3/8	20-3/16	3.7	11.1	22.5	2.5	3	R35
7-6/4-4		89-1/2	51-1/2	26-3/8	22-3/16	4.0	12.2	24.7	2.5	3	R35
7-6/4-6		89-1/2	53-1/2	26-3/8	23-3/16	4.2	12.8	25.9	2.5	3	R35
7-6/5-0		89-1/2	59-1/2	26-3/8	26-3/16	4.8	14.4	29.2	2.5	3	R35
7-6/5-2		89-1/2	61-1/2	26-3/8	27-3/16	4.9	14.9	30.3	2.5	3	R35
7-6/5-6	E1	89-1/2	65-1/2	26-3/8	29-3/16	5.3	16.0	32.5	2.5	3	R35
7-6/6-0	E	89-1/2	71-1/2	26-3/8	32-3/16	5.9	17.7	35.8	2.5	3	R35
8-0/3-0		95-1/2	35-1/2	28-3/8	14-3/16	2.8	8.4	17.1	2.5	3	R35
8-0/3-2		95-1/2	37-1/2	28-3/8	15-3/16	3.0	9.0	18.3	2.5	3	R35
8-0/3-6		95-1/2	41-1/2	28-3/8	17-3/16	3.4	10.2	20.6	2.5	3	R35
8-0/3-10		95-1/2	45-1/2	28-3/8	19-3/16	3.8	11.4	23.0	2.5	3	R35
8-0/4-0		95-1/2	47-1/2	28-3/8	20-3/16	4.0	12.0	24.2	2.5	3	R35
8-0/4-4		95-1/2	51-1/2	28-3/8	22-3/16	4.4	13.1	26.6	2.5	3	R35
8-0/4-6		95-1/2	53-1/2	28-3/8	23-3/16	4.6	13.7	27.8	2.5	3	R35
8-0/5-0	E1	95-1/2	59-1/2	28-3/8	26-3/16	5.1	15.5	31.4	2.5	3	R35
8-0/5-2	E1	95-1/2	61-1/2	28-3/8	27-3/16	5.3	16.1	32.6	2.5	3	R35
8-0/5-6	E	95-1/2	65-1/2	28-3/8	29-3/16	5.5	17.3	34.9	2.5	3	R35
8-0/6-0	E	95-1/2	71-1/2	28-3/8	32-3/16	6.1	19.0	38.5	2.5	3	R35
9-0/3-0		107-1/2	35-1/2	32-3/8	14-3/16	2.9	9.6	19.4	2.5	3	R35
9-0/3-2		107-1/2	37-1/2	32-3/8	15-3/16	3.2	10.3	20.8	2.5	3	R35
9-0/3-6		107-1/2	41-1/2	32-3/8	17-3/16	3.6	11.6	23.5	2.5	3	R35
9-0/3-10		107-1/2	45-1/2	32-3/8	19-3/16	4.1	13.0	26.2	2.5	3	R35
9-0/4-0		107-1/2	47-1/2	32-3/8	20-3/16	4.3	13.6	27.6	2.5	3	R35
9-0/4-4		107-1/2	51-1/2	32-3/8	22-3/16	4.7	15.0	30.3	2.5	3	R35
9-0/4-6		107-1/2	53-1/2	32-3/8	23-3/16	5.0	15.7	31.7	2.5	3	R35
9-0/5-0	E	107-1/2	59-1/2	32-3/8	26-3/16	5.6	17.7	35.8	2.5	3	R35
9-0/5-2	E	107-1/2	61-1/2	32-3/8	27-3/16	5.9	18.4	37.1	2.5	3	R35

Egress Notes:

Check all applicable local codes for emergency egress requirements.

E = Window meets minimum clear opening of 24" height, 20" width, and 5.7 ft².

E1 = Window meets minimum clear opening of 24" height, 20" width, and 5.0 ft².

Encompass by Pella® vinyl window products are intended only for use less than 40 feet above ground level.

East Region Only

(1) Maximum performance when glazed with the appropriate glass thickness.

To convert areas to square meters (m²), multiply square feet by 0.0929

1-Wide Equal Sash - 2-11/16" Replacement Flange Frame (Florida Region)

Call Out	Egress	Frame (Inches)		Clear Opening (Inches)			Visible Glass Ft²	Standard Glass Thickness (mm)		Performance Class & Grade [1]
		Width	Height	Width	Height	Area Ft²		Annealed	Tempered	
FL-12		18-1/8	25	15	9	0.9	1.3	2.5	3	R50
FL-13		18-1/8	37-3/8	15	15-3/16	1.5	2.2	2.5	3	R50
FL-14		18-1/8	49-5/8	15	21-5/16	2.2	3.0	2.5	3	R50
FL-15		18-1/8	62	15	27-1/2	2.8	3.9	2.5	3	R50
FL-16		18-1/8	75	15	34	3.5	4.8	2.5	3	R35
FL-H32		25-1/2	25	22-3/8	9	1.4	2.2	2.5	3	R50
FL-H33		25-1/2	37-3/8	22-3/8	15-3/16	2.3	3.7	2.5	3	R50
FL-H34		25-1/2	49-5/8	22-3/8	21-5/16	3.3	5.2	2.5	3	R50
FL-H35		25-1/2	62	22-3/8	27-1/2	4.2	6.7	2.5	3	R50
FL-H36	E1	25-1/2	75	22-3/8	34	5.2	8.3	2.5	3	R35
FL-22		36	25	32-7/8	9	2.0	3.5	2.5	3	R50
FL-23		36	37-3/8	32-7/8	15-3/16	3.4	5.9	2.5	3	R50
FL-24		36	49-5/8	32-7/8	21-5/16	4.8	8.3	2.5	3	R50
FL-25	E	36	62	32-7/8	27-1/2	6.2	10.7	2.5	3	R50
FL-26	E	36	75	32-7/8	34	7.7	13.3	3	3	R35
FL-32		52-1/8	25	49	9	3.0	5.6	2.5	3	R50
FL-33		52-1/8	37-3/8	49	15-3/16	5.1	9.4	2.5	3	R50
FL-34		52-1/8	49-5/8	49	21-5/16	7.2	13.1	3	3	R50
FL-35	E	52-1/8	62	49	27-1/2	9.3	16.9	3	3	R50

Egress Notes:

Check all applicable local codes for emergency egress requirements.

E = Window meets minimum clear opening of 24" height, 20" width, and 5.7 ft².

E1 = Window meets minimum clear opening of 24" height, 20" width, and 5.0 ft².

Encompass by Pella® vinyl window products are intended only for use less than 40 feet above ground level.

Florida Region Only

(1) Maximum performance when glazed with the appropriate glass thickness.

To convert areas to square meters (m²), multiply square feet by 0.0929

1-Wide Equal Sash - 2-11/16" Frame (West Region)

Unit	Egress	Frame (Inches)		Clear Opening (inches) (Vent Units Only)			Vent Area Ft²	Visible Glass Ft²	Standard Glass Thickness (mm)		Performance Class & Grade [1]
		Width	Height	Width	Height	Ft²			Annealed	Tempered	
2-0/3-0		23-1/2	35-1/2	20-1/2	13-5/8	1.9	1.9	4.1	2.5	3	R35
2-0/3-6		23-1/2	41-1/2	20-1/2	16-5/8	2.3	2.4	4.9	2.5	3	R35
2-0/4-0		23-1/2	47-1/2	20-1/2	19-5/8	2.7	2.8	5.8	2.5	3	R35
2-0/4-6		23-1/2	53-1/2	20-1/2	22-5/8	3.2	3.2	6.6	2.5	3	R35
2-0/5-0		23-1/2	59-1/2	20-1/2	25-5/8	3.6	3.6	7.5	2.5	3	R35
2-0/5-6		23-1/2	65-1/2	20-1/2	28-5/8	4.0	4.1	8.4	2.5	3	R35
2-0/6-0		23-1/2	71-1/2	20-1/2	31-5/8	4.5	4.5	9.2	2.5	3	R35
2-6/3-0		29-1/2	35-1/2	26-1/2	13-5/8	2.5	2.5	5.3	2.5	3	R35
2-6/3-6		29-1/2	41-1/2	26-1/2	16-5/8	3.0	3.1	6.4	2.5	3	R35
2-6/4-0		29-1/2	47-1/2	26-1/2	19-5/8	3.6	3.6	7.5	2.5	3	R35
2-6/4-6		29-1/2	53-1/2	26-1/2	22-5/8	4.1	4.2	8.6	2.5	3	R35
2-6/5-0		29-1/2	59-1/2	26-1/2	25-5/8	4.7	4.7	9.7	2.5	3	R35
2-6/5-6	E1	29-1/2	65-1/2	26-1/2	28-5/8	5.2	5.3	10.8	2.5	3	R35
2-6/6-0	E	29-1/2	71-1/2	26-1/2	31-5/8	5.8	5.8	11.9	2.5	3	R35
3-0/3-0		35-1/2	35-1/2	32-1/2	13-5/8	3.0	3.1	6.5	2.5	3	R35
3-0/3-6		35-1/2	41-1/2	32-1/2	16-5/8	3.7	3.8	7.8	2.5	3	R35
3-0/4-0		35-1/2	47-1/2	32-1/2	19-5/8	4.4	4.4	9.2	2.5	3	R35
3-0/4-6		35-1/2	53-1/2	32-1/2	22-5/8	5.1	5.1	10.5	2.5	3	R35
3-0/5-0	E	35-1/2	59-1/2	32-1/2	25-5/8	5.7	5.8	11.9	2.5	3	R35
3-0/5-6	E	35-1/2	65-1/2	32-1/2	28-5/8	6.4	6.5	13.2	2.5	3	R35
3-0/6-0	E	35-1/2	71-1/2	32-1/2	31-5/8	7.1	7.1	14.6	2.5	3	R35
3-6/3-0		41-1/2	35-1/2	38-1/2	13-5/8	3.6	3.6	7.7	2.5	3	R35
3-6/3-6		41-1/2	41-1/2	38-1/2	16-5/8	4.4	4.4	9.3	2.5	3	R35
3-6/4-0		41-1/2	47-1/2	38-1/2	19-5/8	5.2	5.2	10.9	2.5	3	R35
3-6/4-6		41-1/2	53-1/2	38-1/2	22-5/8	6.0	6.1	12.5	2.5	3	R35
3-6/5-0	E	41-1/2	59-1/2	38-1/2	25-5/8	6.8	6.9	14.1	2.5	3	R35
3-6/5-6	E	41-1/2	65-1/2	38-1/2	28-5/8	7.6	7.7	15.7	2.5	3	R35
3-6/6-0	E	41-1/2	71-1/2	38-1/2	31-5/8	8.4	8.5	17.3	2.5	3	R35

Egress Notes:

Check all applicable local codes for emergency egress requirements.

E = Window meets minimum clear opening of 24" height, 20" width, and 5.7 ft².

E1 = Window meets minimum clear opening of 24" height, 20" width, and 5.0 ft².

Encompass by Pella® vinyl window products are intended only for use less than 40 feet above ground level.

West Region Only

(1) Maximum performance when glazed with the appropriate glass thickness.

To convert areas to square meters (m²), multiply square feet by 0.0929

2-Wide Equal Sash - 2-11/16" Frame (West Region)

Unit	Egress	Frame (Inches)		Clear Opening (inches) (Vent Units Only)			Vent Area Ft²	Visible Glass Ft²	Standard Glass Thickness (mm)		Performance Class & Grade [1]
		Width	Height	Width	Height	Ft²			Annealed	Tempered	
4-0/3-0		47-1/2	35-1/2	20-1/2	13-5/8	1.9	3.8	8.0	2.5	3	R25
4-0/3-6		47-1/2	41-1/2	20-1/2	16-5/8	2.3	4.6	9.6	2.5	3	R25
4-0/4-0		47-1/2	47-1/2	20-1/2	19-5/8	2.7	5.5	11.3	2.5	3	R25
4-0/4-6		47-1/2	53-1/2	20-1/2	22-5/8	3.2	6.3	13.0	2.5	3	R25
4-0/5-0		47-1/2	59-1/2	20-1/2	25-5/8	3.6	7.1	14.6	2.5	3	R25
4-0/5-6		47-1/2	65-1/2	20-1/2	28-5/8	4.0	8.0	16.3	2.5	3	R25
4-0/6-0		47-1/2	71-1/2	20-1/2	31-5/8	4.5	8.8	18.0	2.5	3	R25
5-0/3-0		59-1/2	35-1/2	26-1/2	13-5/8	2.5	4.9	10.4	2.5	3	R25
5-0/3-6		59-1/2	41-1/2	26-1/2	16-5/8	3.0	6.0	12.5	2.5	3	R25
5-0/4-0		59-1/2	47-1/2	26-1/2	19-5/8	3.6	7.1	14.7	2.5	3	R25
5-0/4-6		59-1/2	53-1/2	26-1/2	22-5/8	4.1	8.2	16.9	2.5	3	R25
5-0/5-0		59-1/2	59-1/2	26-1/2	25-5/8	4.7	9.3	19.0	2.5	3	R25
5-0/5-6	E1	59-1/2	65-1/2	26-1/2	28-5/8	5.2	10.3	21.2	2.5	3	R25
5-0/6-0	E	59-1/2	71-1/2	26-1/2	31-5/8	5.8	11.4	23.4	2.5	3	R25
6-0/3-0		71-1/2	35-1/2	32-1/2	13-5/8	3.0	6.1	12.8	2.5	3	R25
6-0/3-6		71-1/2	41-1/2	32-1/2	16-5/8	3.7	7.4	15.4	2.5	3	R25
6-0/4-0		71-1/2	47-1/2	32-1/2	19-5/8	4.4	8.7	18.1	2.5	3	R25
6-0/4-6		71-1/2	53-1/2	32-1/2	22-5/8	5.1	10.1	20.8	2.5	3	R25
6-0/5-0	E	71-1/2	59-1/2	32-1/2	25-5/8	5.7	11.4	23.4	2.5	3	R25
6-0/5-6	E	71-1/2	65-1/2	32-1/2	28-5/8	6.4	12.7	26.1	2.5	3	R25
6-0/6-0	E	71-1/2	71-1/2	32-1/2	31-5/8	7.1	14.1	28.8	2.5	3	R25
7-0/3-0		83-1/2	35-1/2	38-1/2	13-5/8	3.6	7.2	15.1	2.5	3	R20
7-0/3-6		83-1/2	41-1/2	38-1/2	16-5/8	4.4	8.8	18.3	2.5	3	R20
7-0/4-0		83-1/2	47-1/2	38-1/2	19-5/8	5.2	10.4	21.5	2.5	3	R20
7-0/4-6		83-1/2	53-1/2	38-1/2	22-5/8	6.0	11.9	24.6	2.5	3	R20
7-0/5-0	E	83-1/2	59-1/2	38-1/2	25-5/8	6.8	13.5	27.8	2.5	3	R20
7-0/5-6	E	83-1/2	65-1/2	38-1/2	28-5/8	7.6	15.1	31.0	2.5	3	R20
7-0/6-0	E	83-1/2	71-1/2	38-1/2	31-5/8	8.4	16.7	34.1	2.5	3	R20

Egress Notes:

Check all applicable local codes for emergency egress requirements.

E = Window meets minimum clear opening of 24" height, 20" width, and 5.7 ft².

E1 = Window meets minimum clear opening of 24" height, 20" width, and 5.0 ft².

Encompass by Pella® vinyl window products are intended only for use less than 40 feet above ground level.

West Region Only

(1) Maximum performance when glazed with the appropriate glass thickness.

To convert areas to square meters (m²), multiply square feet by 0.0929 To convert areas to square meters (m²), multiply square feet by 0.0929

3-Wide Equal Sash - 2-11/16" Frame (West Region)

Unit	Egress	Frame (Inches)		Clear Opening (inches) (Vent Units Only)			Vent Area Ft²	Visible Glass Ft²	Standard Glass Thickness (mm)		Performance Class & Grade [1]
		Width	Height	Width	Height	Ft²			Annealed	Tempered	
6-0/3-0		71-1/2	35-1/2	20-1/2	13-5/8	1.9	9.1	11.7	2.5	3	R25
6-0/3-6		71-1/2	41-1/2	20-1/2	16-5/8	2.3	11.1	14.1	2.5	3	R25
6-0/4-0		71-1/2	47-1/2	20-1/2	19-5/8	2.7	13.1	16.5	2.5	3	R25
6-0/4-6		71-1/2	53-1/2	20-1/2	22-5/8	3.2	15.0	19.0	2.5	3	R25
6-0/5-0		71-1/2	59-1/2	20-1/2	25-5/8	3.6	17.0	21.4	2.5	3	R25
6-0/5-6		71-1/2	65-1/2	20-1/2	28-5/8	4.0	19.0	23.8	2.5	3	R25
6-0/6-0		71-1/2	71-1/2	20-1/2	31-5/8	4.5	21.0	26.3	2.5	3	R25
7-6/3-0		89-1/2	35-1/2	26-1/2	13-5/8	2.5	11.6	15.2	2.5	3	R25
7-6/3-6		89-1/2	41-1/2	26-1/2	16-5/8	3.0	14.2	18.4	2.5	3	R25
7-6/4-0		89-1/2	47-1/2	26-1/2	19-5/8	3.6	16.7	21.6	2.5	3	R25
7-6/4-6		89-1/2	53-1/2	26-1/2	22-5/8	4.1	19.3	24.8	2.5	3	R25
7-6/5-0		89-1/2	59-1/2	26-1/2	25-5/8	4.7	21.8	28.0	2.5	3	R25
7-6/5-6	E1	89-1/2	65-1/2	26-1/2	28-5/8	5.2	24.4	31.2	2.5	3	R25
7-6/6-0	E	89-1/2	71-1/2	26-1/2	31-5/8	5.8	27.0	34.4	2.5	3	R25
9-0/3-0		107-1/2	35-1/2	32-1/2	13-5/8	3.0	14.2	18.8	2.5	3	R25
9-0/3-6		107-1/2	41-1/2	32-1/2	16-5/8	3.7	17.3	22.8	2.5	3	R25
9-0/4-0		107-1/2	47-1/2	32-1/2	19-5/8	4.4	20.4	26.7	2.5	3	R25
9-0/4-6		107-1/2	53-1/2	32-1/2	22-5/8	5.1	23.5	30.7	2.5	3	R25
9-0/5-0	E	107-1/2	59-1/2	32-1/2	25-5/8	5.7	26.6	34.6	2.5	3	R25

Egress Notes:

Check all applicable local codes for emergency egress requirements.

E = Window meets minimum clear opening of 24" height, 20" width, and 5.7 ft².

E1 = Window meets minimum clear opening of 24" height, 20" width, and 5.0 ft².

Encompass by Pella® vinyl window products are intended only for use less than 40 feet above ground level.

West Region Only

(1) Maximum performance when glazed with the appropriate glass thickness.

To convert areas to square meters (m²), multiply square feet by 0.0929 To convert areas to square meters (m²), multiply square feet by 0.0929

Encompass by Pella® Single-Hung Window

Detailed Product Description

Frame

- Overall frame depth: 2-11/16" [new construction frame with integral nailing fin [and J-channel (East region only)]] [replacement frame [with integral flush flange (Florida region only)].
- Frame members are extruded, [high impact-resistant (2-11/16" frame, East Only)], rigid uPVC [with optional foam insulation[1]].
- Frame members are mitered and heat-fused to provide a fully welded corner assembly.

Sash

- Sash members are extruded, rigid uPVC [with optional foam insulation[1]].
- Sash members are mitered and heat-fused to provide a fully welded corner assembly.
- Integral extruded sash lift at checkrail.

Weatherstripping

- Fin-type pile around the perimeter of the vent sash.

Glazing System[2]

- Quality float glass complying with ASTM C1036, Quality.
- Exterior face glazed 3/4" sealed insulating glass.
- [Clear] [[Advanced] [SunDefense™] [SunDefense+] [NaturalSun] [NaturalSun+] [Advanced Comfort (West region only)] [bronze, Advanced (East Region only)] Low-E [with Argon]]; [Clear] [NaturalSun Low-E] [Standard obscure [Fern (West region only)] [Rain] [High Altitude [with argon] (West region only)]. [tempered].

Interior / Exterior

- All window frame members have an integral color extruded throughout the profiles.
- All exposed PVC surfaces are smooth, glossy and uniform in appearance.
- East Region Finish color [White] [Almond] [Fossil] (all frame types); West Region Finish color [White (all frame types)] [[Almond] [Fossil] (Nail Fin frame only)].

Hardware

- Constant force balances connected to sash with stainless steel spring and concealed within the frame.
- Lower sash is fully operable for ventilation.
- All fasteners are corrosion-resistant material compatible with PVC.
- Lock is factory installed zinc die cast self-aligning cam-action lock located on the checkrail.
- 2-11/16" Units ≥ 29-1/2" wide have two locks.
- Integral extruded sash lift.
- Tilt latches are factory installed, and located on the checkrail (East only).
- Hardware is factory pre-finished to match unit.

Optional Products

- Factory applied primed wood jamb extension for [4-9/16"] [6-9/16"] wall depth, for 2-11/16" fin frame East region units only

Grilles

- Grilles-Between-the-Glass
  - Insulating glass contains [3/4" contoured (East or West)] [5/8" flat (West only)] aluminum grilles permanently installed between two panes of glass
  - Grilles match color of interior and exterior frame.

Hardware

- Drywall Pass Through option is available on fin frame, single units of frame size greater or equal to 29.5'' x 59.5''.
- Dry-wall Pass Through option is available on fin frame two wide composites with individual units of frame size greater or equal to 29.5'' x 59.5'' and less than or equal to 35.5'' x 71.5''.
- Optional limited opening hardware available for field installation on vent units in [White] [Almond] extruded vinyl to match the interior of the unit; nominal 3-3/4" opening.
- Optional window opening control device available for field installation. Device allows window to open less than 4" with normal operation, with a release mechanism that allows the sash to open completely. Complies with ASTM F2090-10.

Screens

- Half-size with black vinyl coated 18/14 mesh fiberglass screen cloth complying with FS L-S125B, ASTM D 3656 and SMA 1201.
- Set in aluminum frame and fitted to outside of window.
- Supplied complete with all necessary hardware.

Foam Insulation Inserts[1]

> 36" FRAME WIDTH OR > 59.5" FRAME HEIGHT

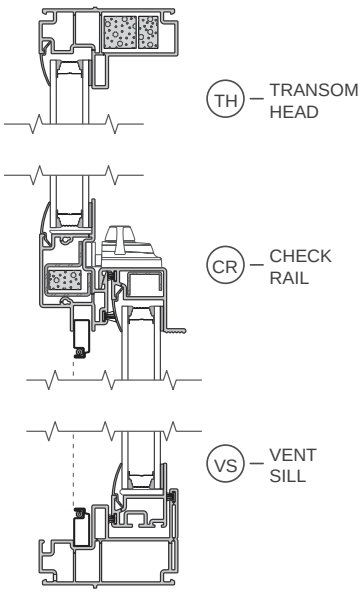

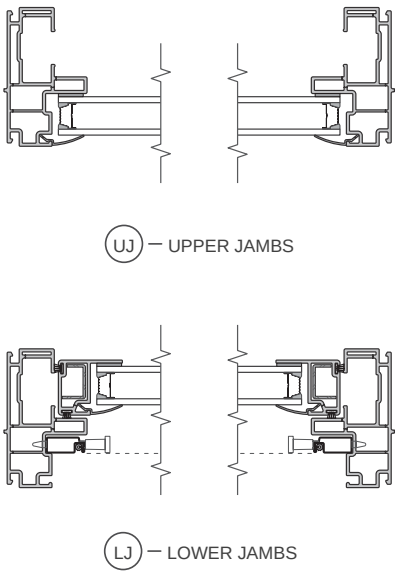

East and West Regions

(1) Foam insulation inserts are not available with clear glazing.

(2) SunDefense+ and NaturalSun+ are only available with argon fill, and are not available for obscure glass.

Unit sections - Frame Types

EAST REGION - NEW CONSTRUCTION FRAME
Standard Nail Fin

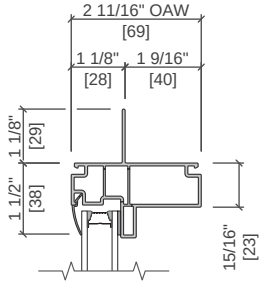

WEST REGION - NEW CONSTRUCTION FRAME
Standard Nail Fin

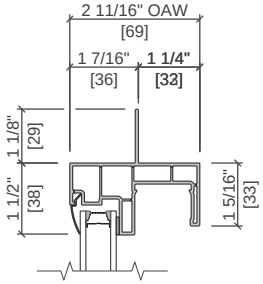

Standard Nail Fin with J-Channel

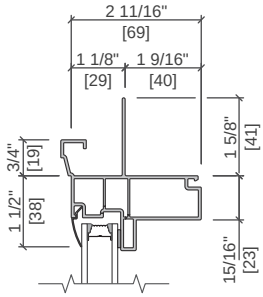

WEST REGION - REPLACEMENT FRAME
Standard Block Frame

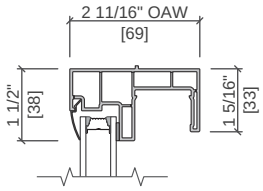

5/8" Flush Flange - Florida Region Only

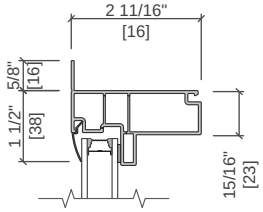

Flush Flange

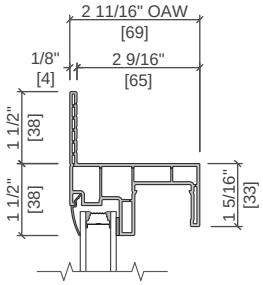

EAST REGION - REPLACEMENT FRAME
Standard Block Frame

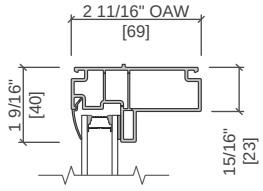

East and West Regions

Scale 3" = 1' 0"
All dimensions are approximate.

Encompass by Pella® Single-Hung Window

Unit Sections - 2-11/16" New Construction Frame, East Region

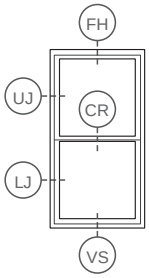

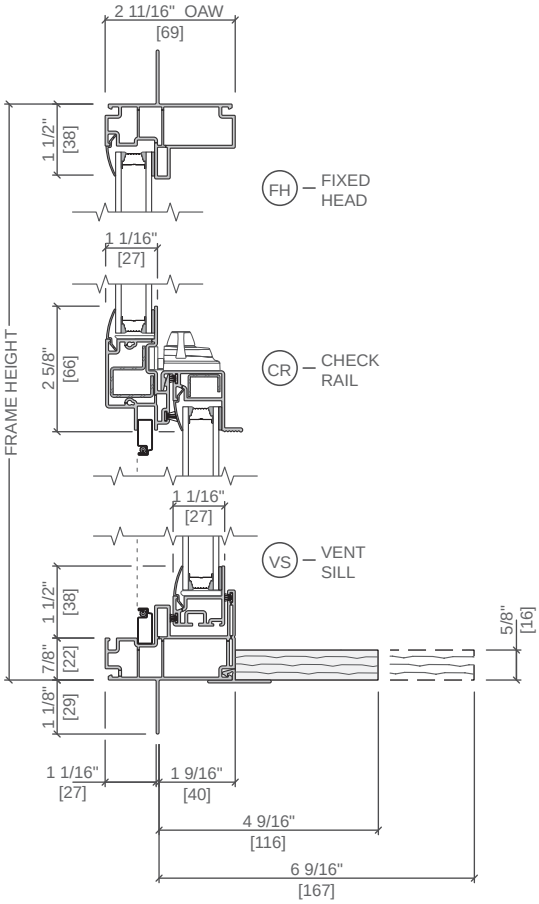

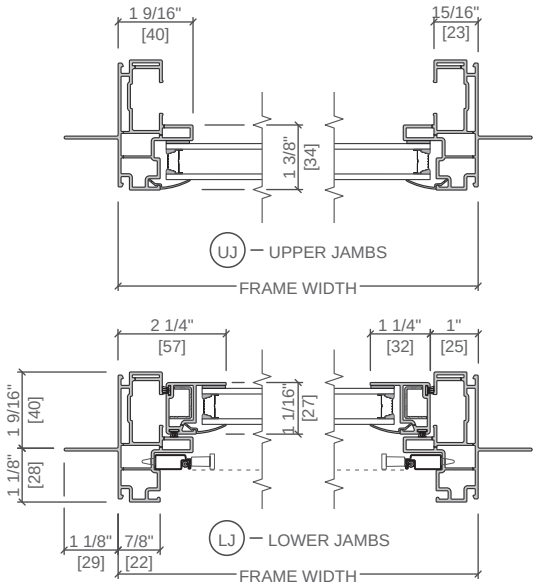

Optional Factory Applied Wood Jamb Extensions

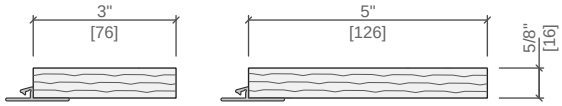

East Region Only

Scale 3" = 1' 0"
All dimensions are approximate.

Encompass by Pella® Single-Hung Window

Unit Sections - 2-11/16" New Construction Frame, East Region

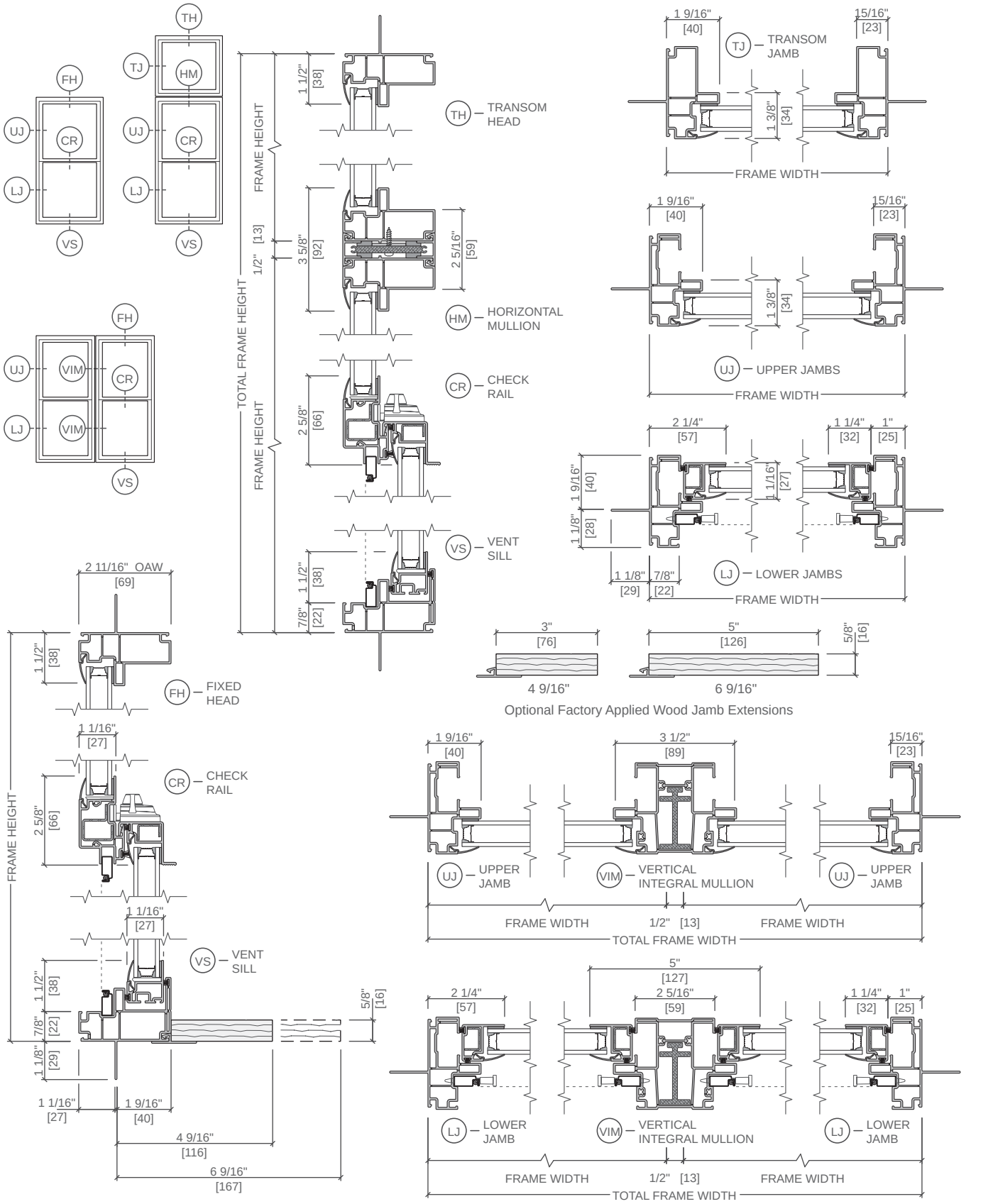

Scale 3" = 1' 0"
All dimensions are approximate.

Encompass by Pella® Single-Hung Window

Unit Sections - 2-11/16" New Construction Frame, East Region

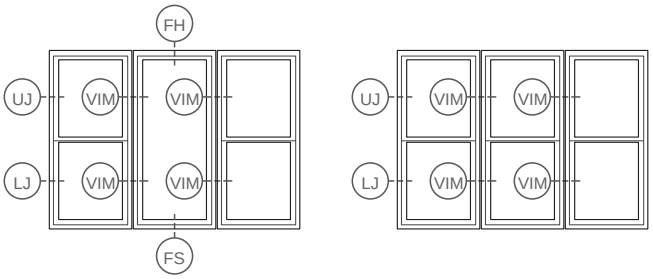

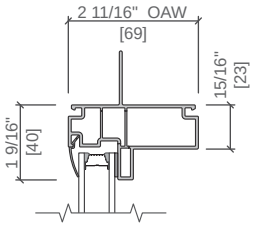

FH – FIXED HEAD

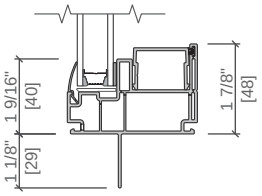

FS – FIXED SILL

East Region Only

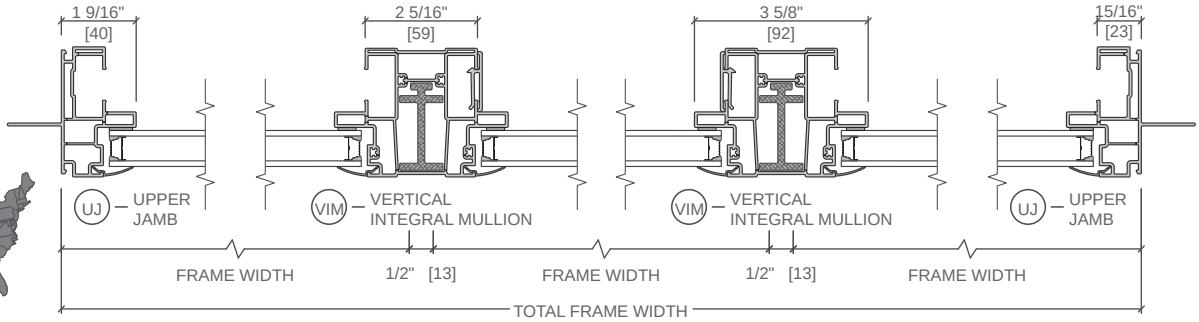

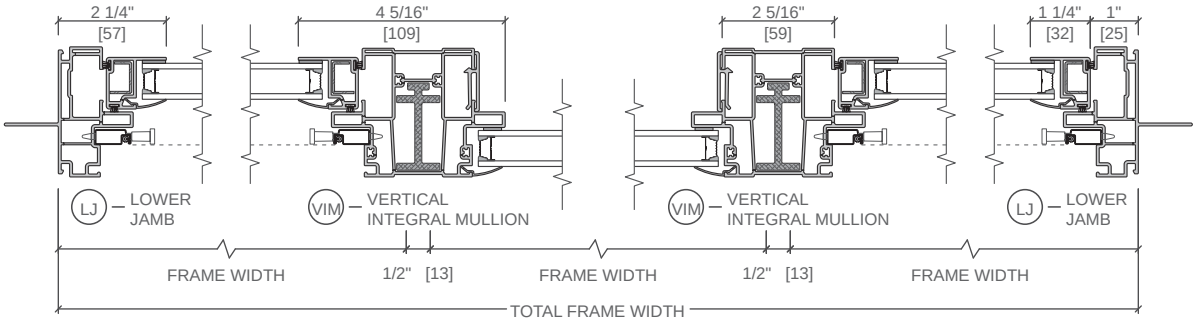

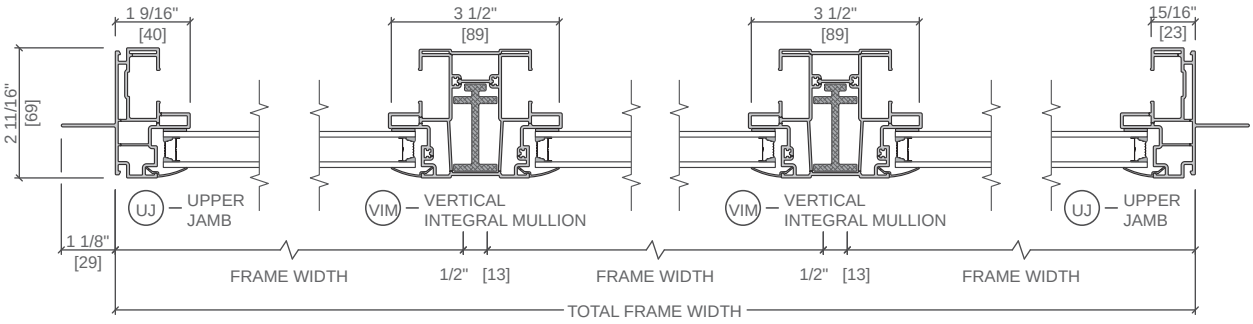

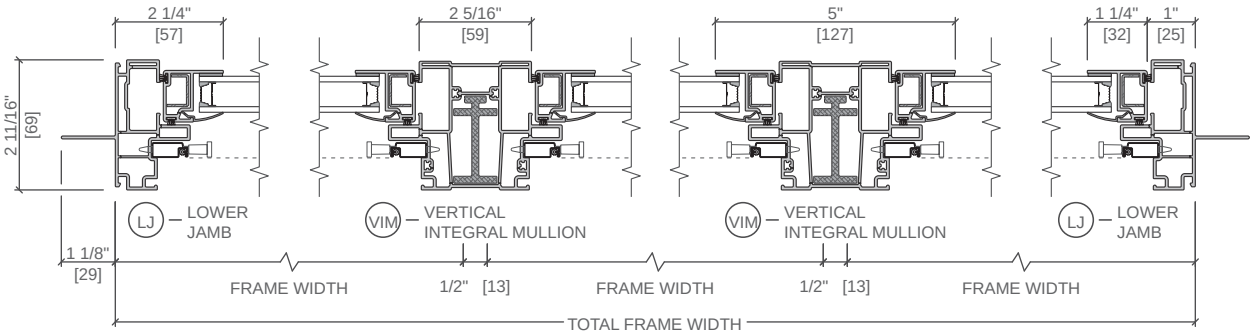

Scale 3" = 1' 0"
All dimensions are approximate.

Encompass by Pella® Single-Hung Window

Unit Sections - 2-11/16" New Construction Frame with J-Channel, East Region

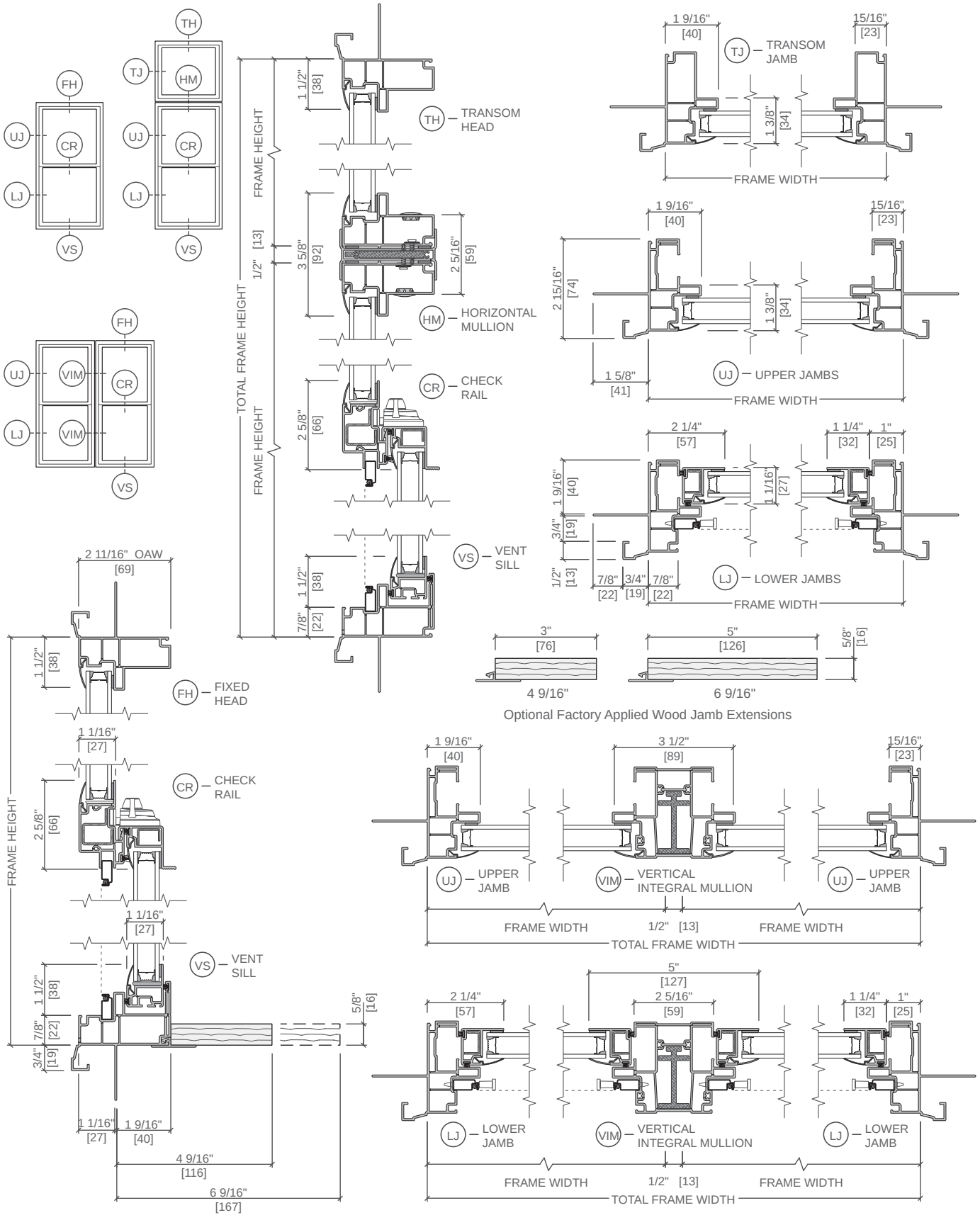

Scale 3" = 1' 0"
All dimensions are approximate.

Encompass by Pella® Single-Hung Window

Unit Sections - 2-11/16" New Construction Frame with J-Channel, East Region

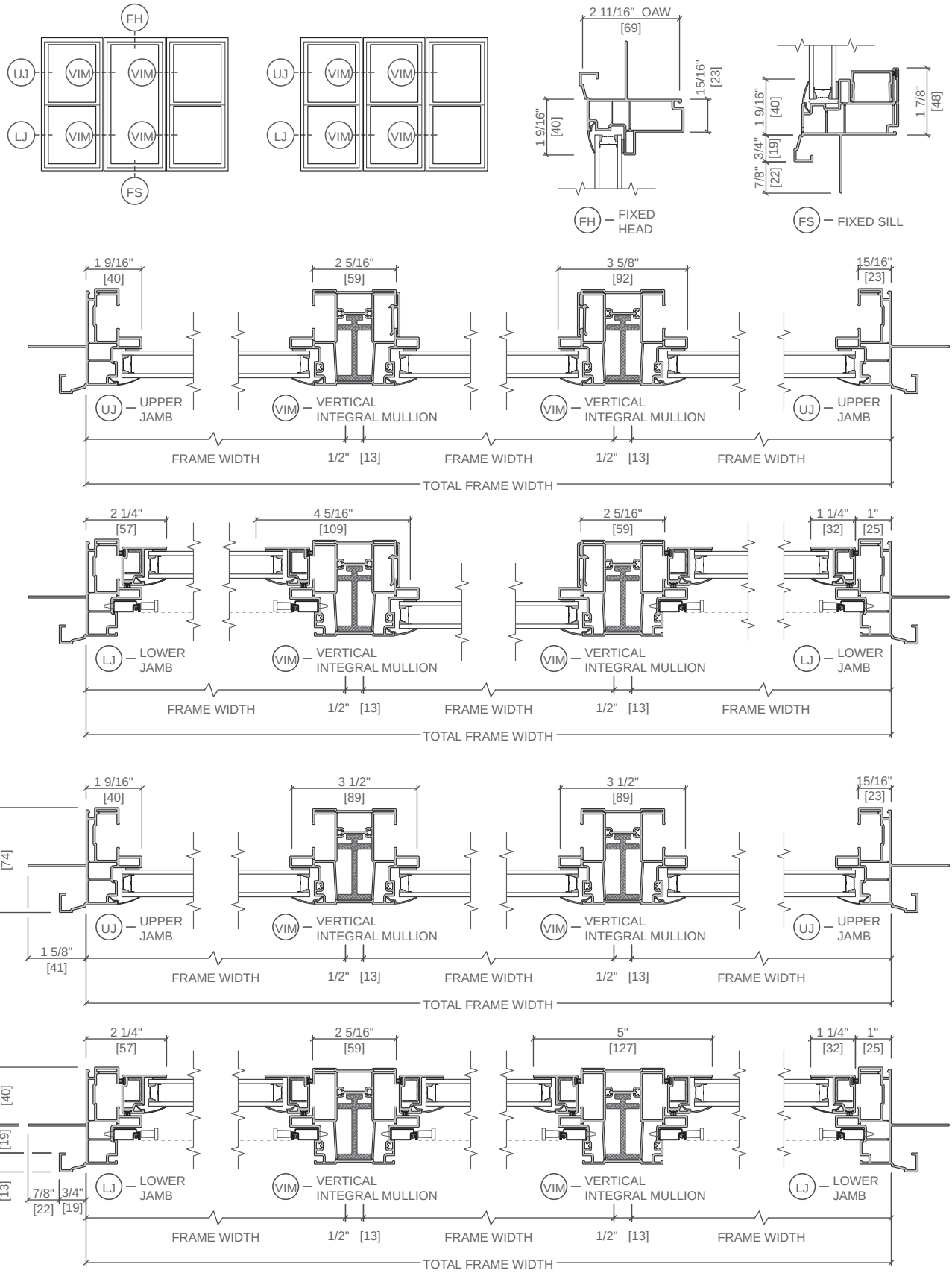

Scale 3" = 1' 0"
All dimensions are approximate.

Encompass by Pella® Single-Hung Window

Unit Sections - 2-11/16" Replacement Flush Flange Frame, Florida Region

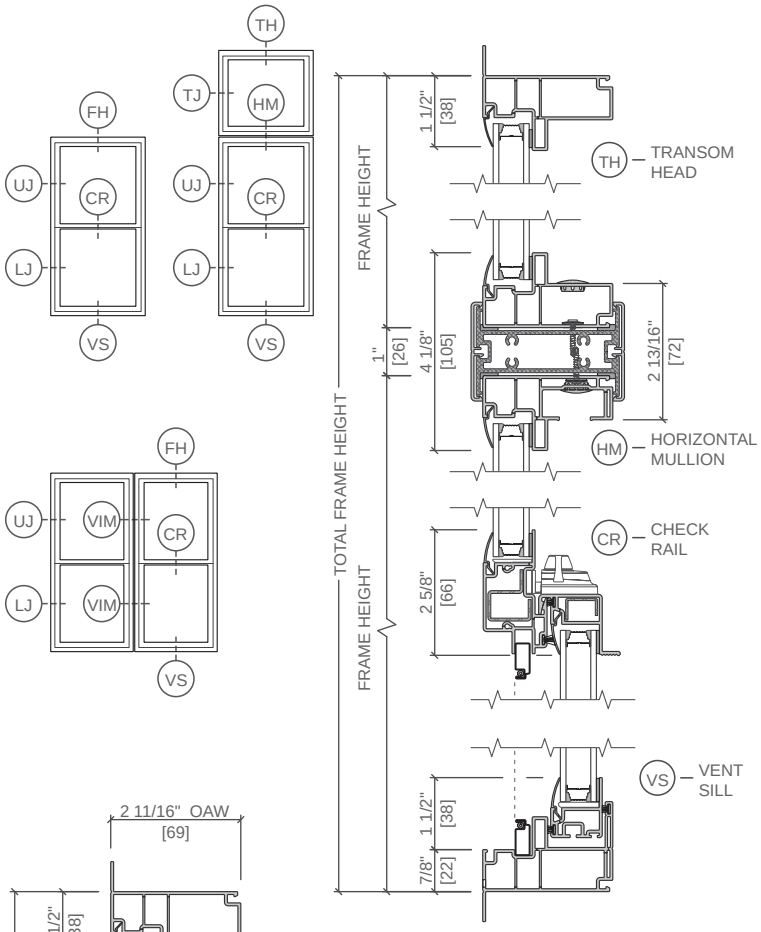

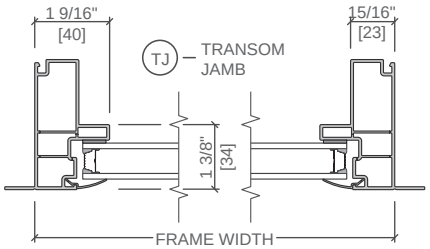

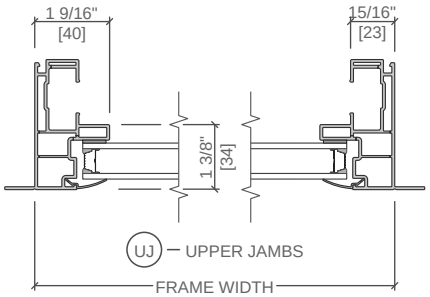

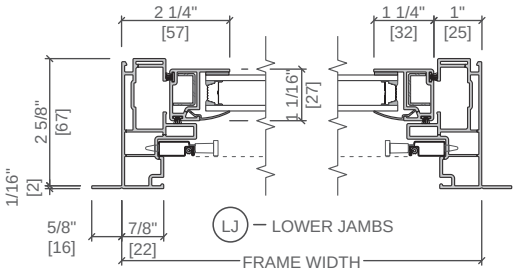

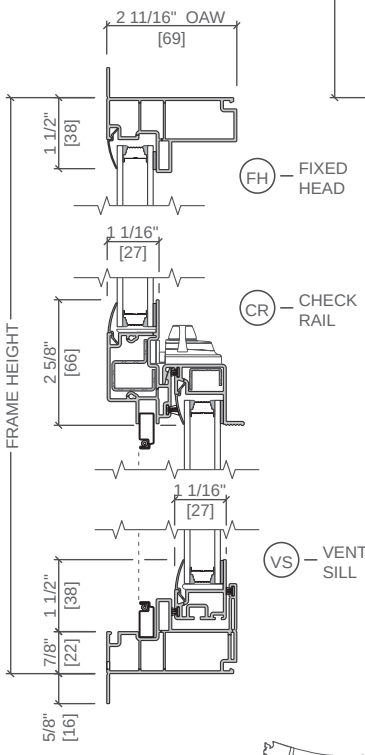

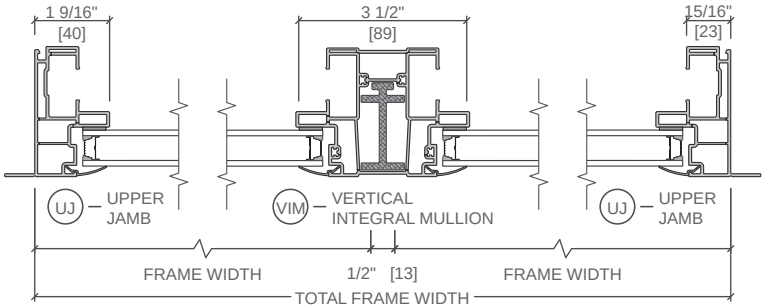

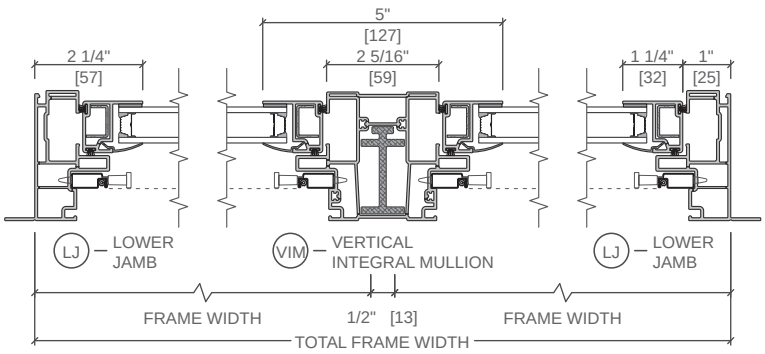

Florida Region Only

Scale 3" = 1' 0"
All dimensions are approximate.

Encompass by Pella® Single-Hung Window

Unit Sections - 2-11/16" Replacement Flush Flange Frame, Florida Region

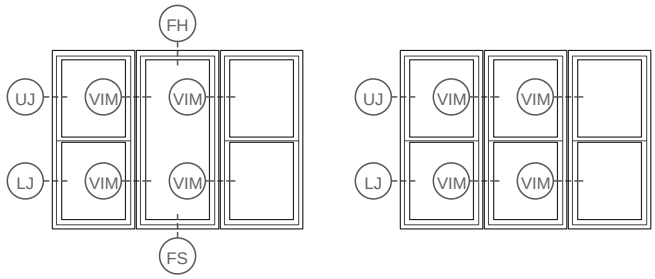

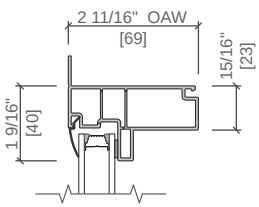

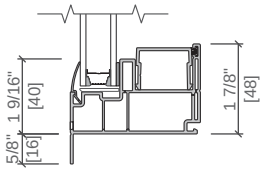

FH – FIXED HEAD

FS – FIXED SILL

Florida Region Only

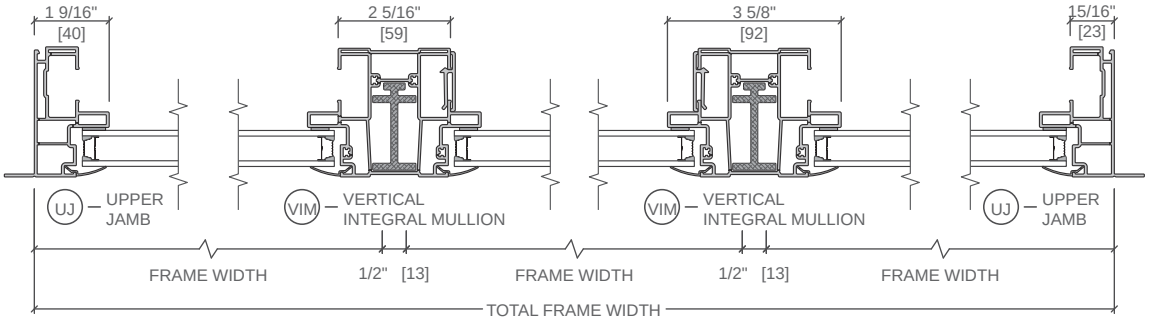

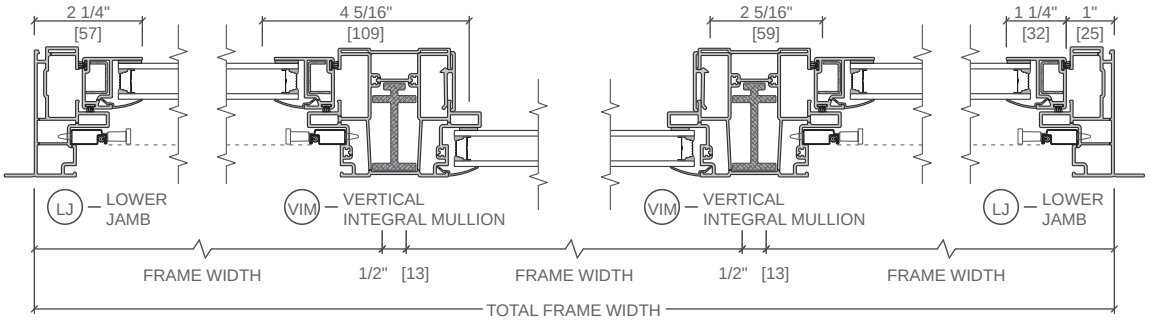

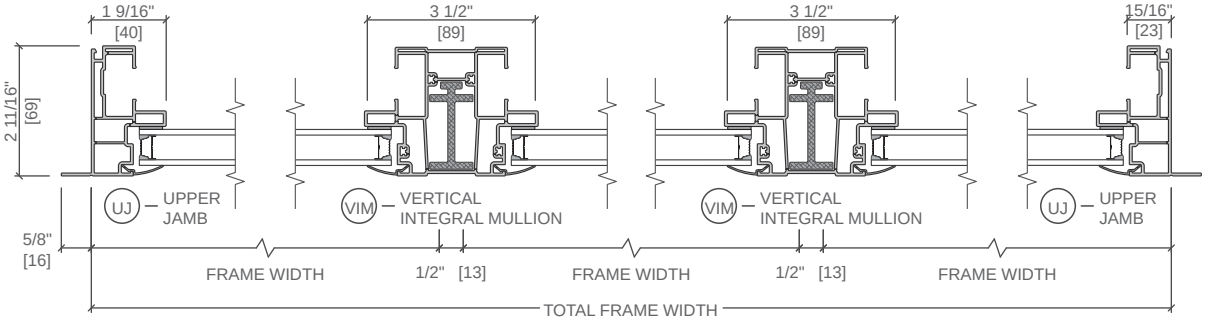

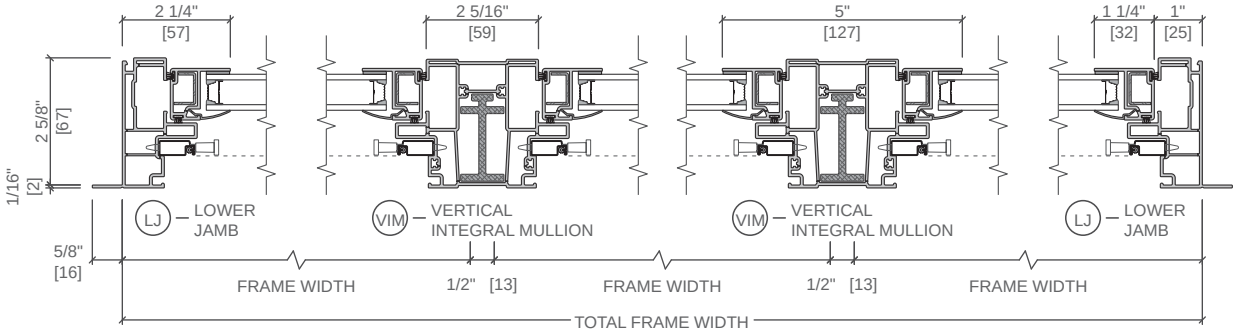

Scale 3" = 1' 0"
All dimensions are approximate.

Encompass by Pella® Single-Hung Window

Unit Sections - 2-11/16" Replacement Frame, East Region

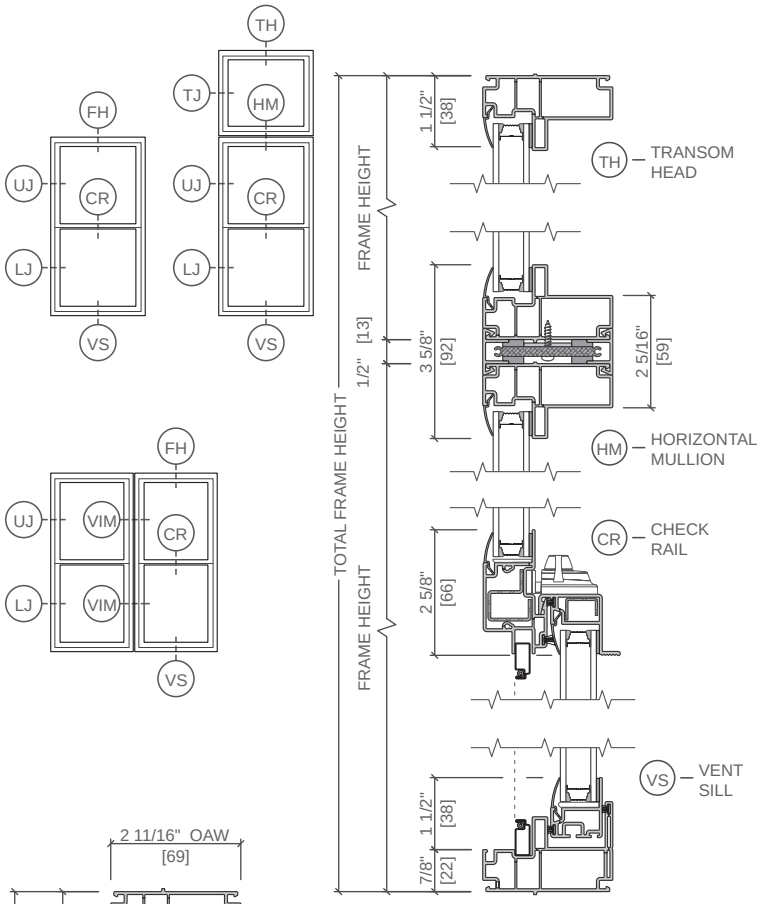

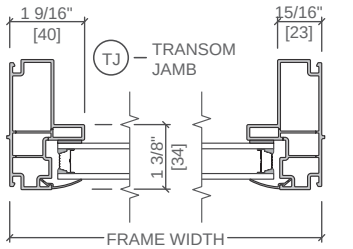

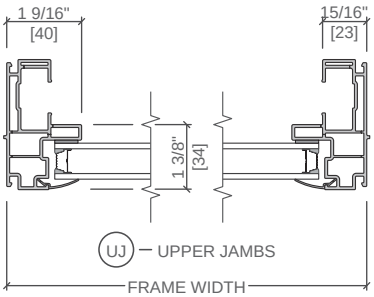

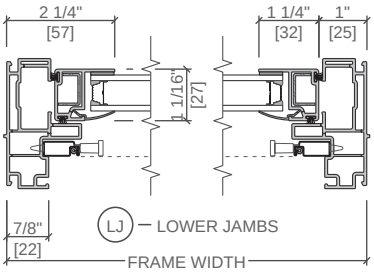

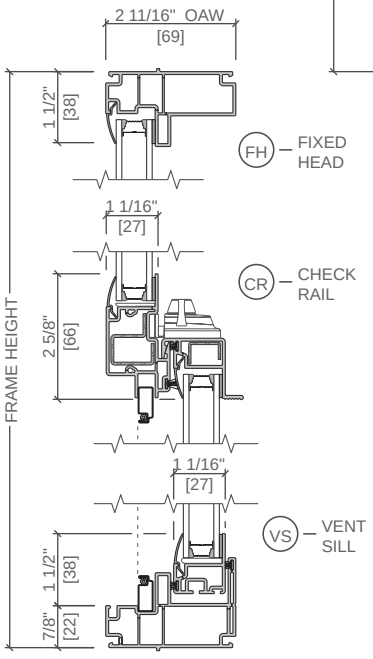

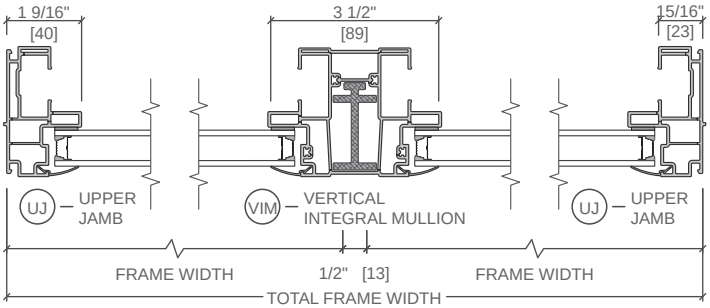

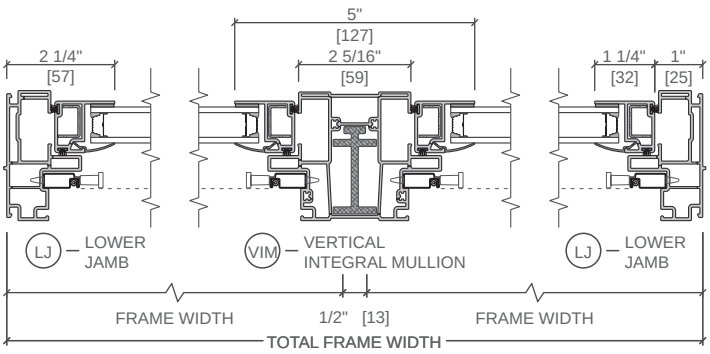

East Region Only

Scale 3" = 1' 0"
All dimensions are approximate.

Encompass by Pella® Single-Hung Window

Unit Sections - 2-11/16" Replacement Frame, East Region

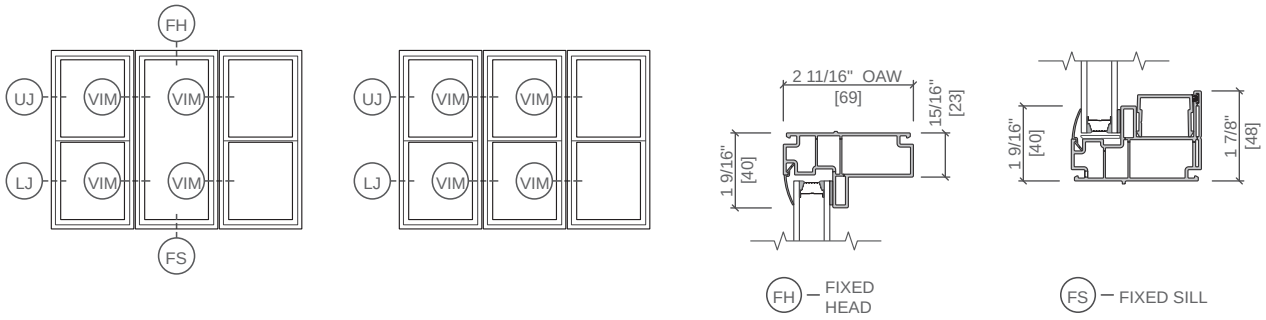

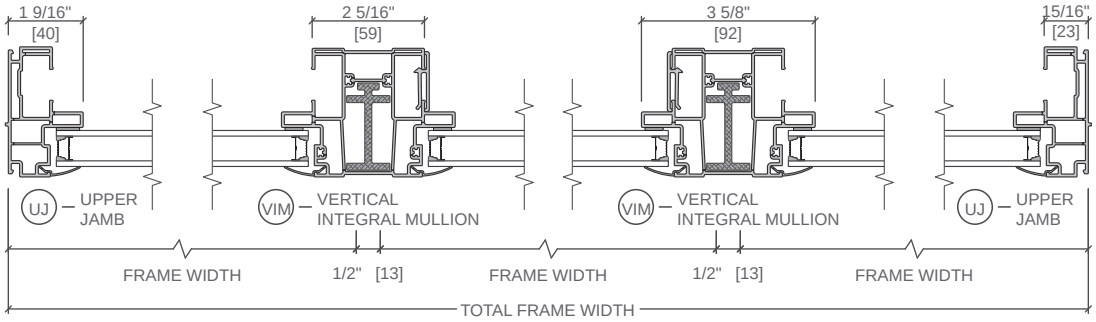

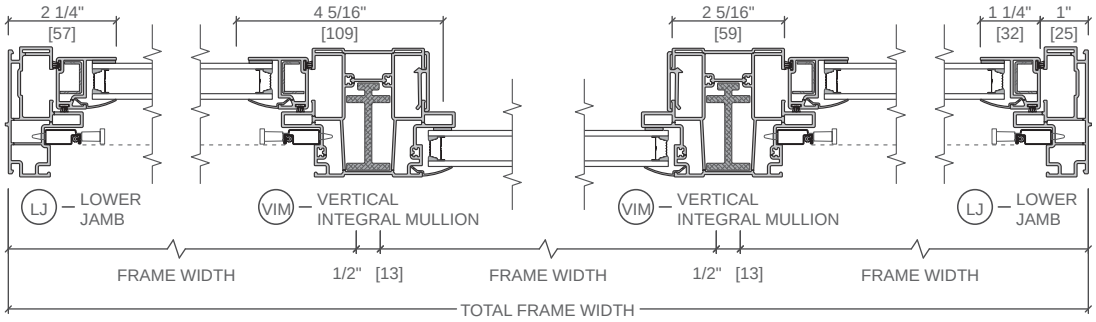

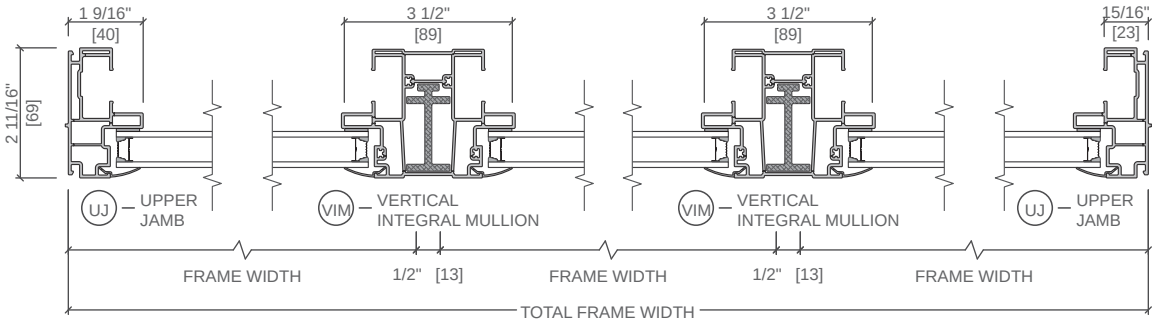

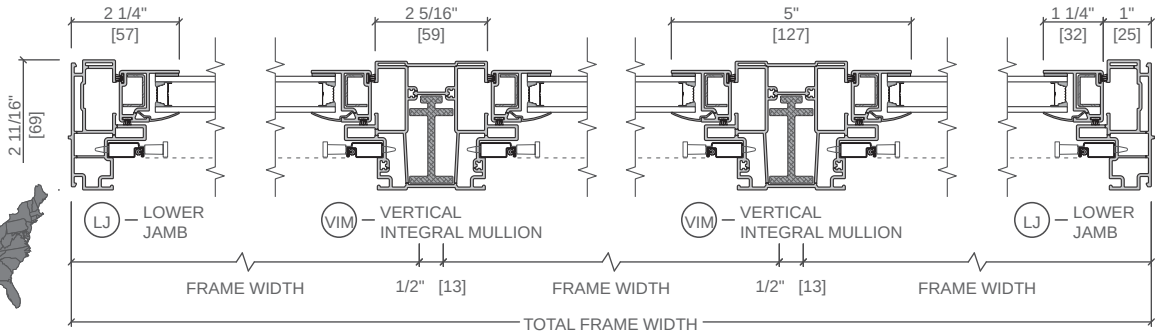

East Region Only

Scale 3" = 1' 0"
All dimensions are approximate.

Encompass by Pella® Single-Hung Window

Unit Sections - 2-11/16" New Construction Frame, West Region

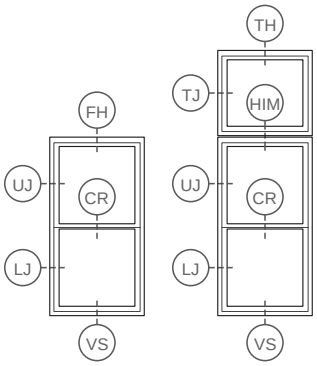

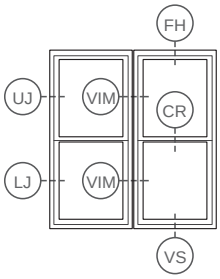

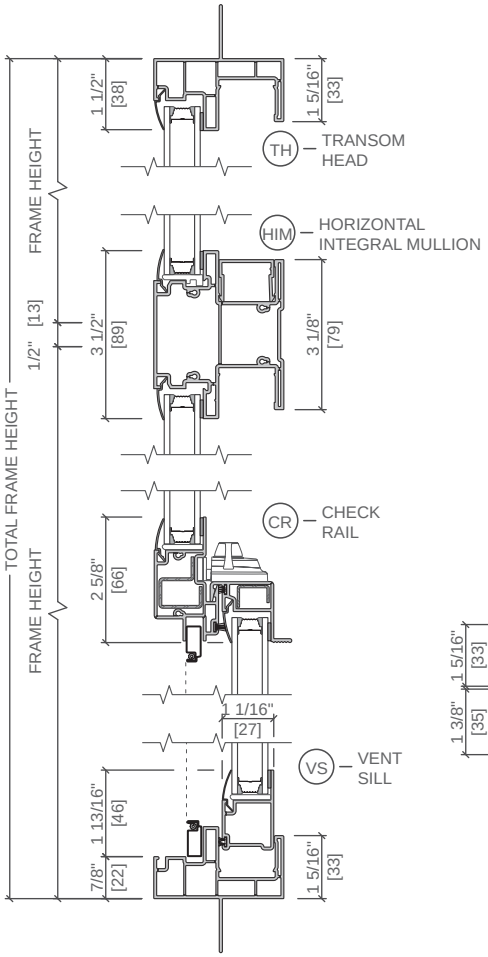

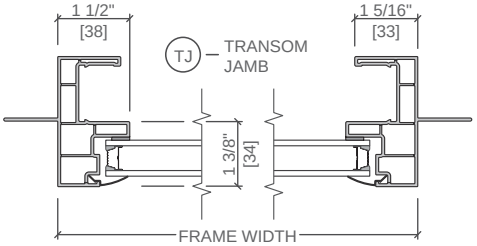

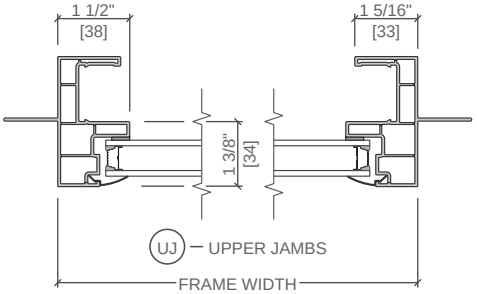

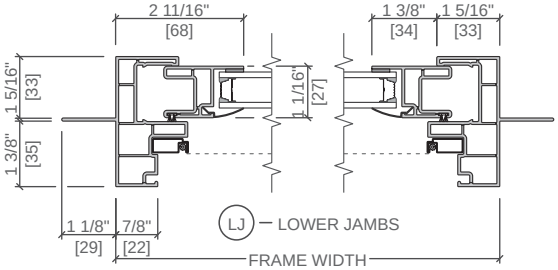

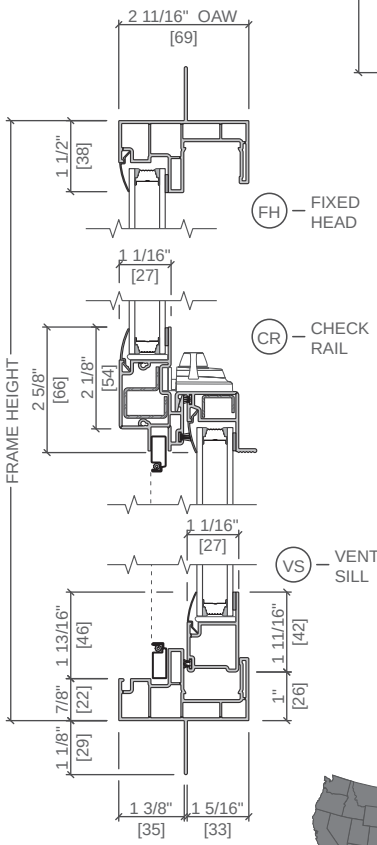

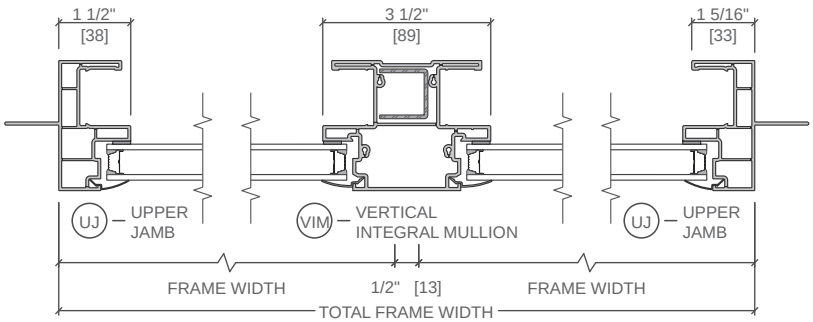

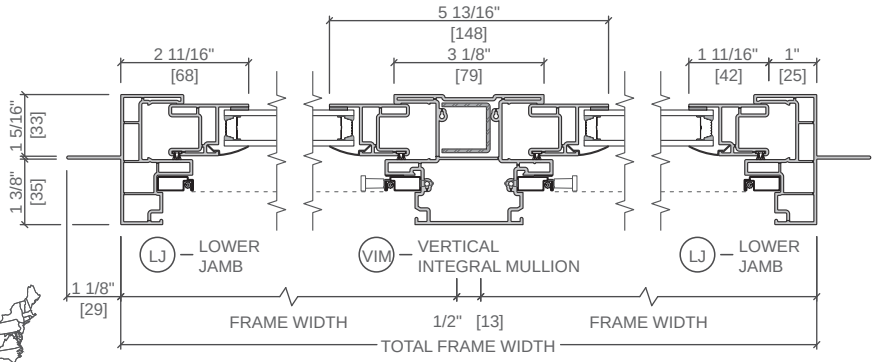

West Region Only

Scale 3" = 1' 0"
All dimensions are approximate.

Encompass by Pella® Single-Hung Window

Unit Sections - 2-11/16" New Construction Frame, West Region

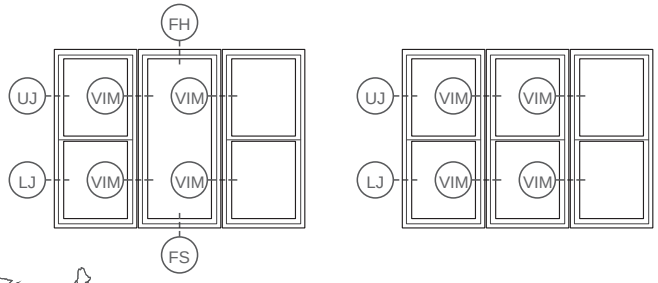

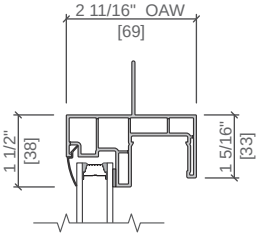

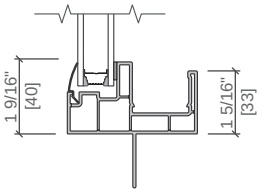

FH – FIXED HEAD

FS – FIXED SILL

West Region Only

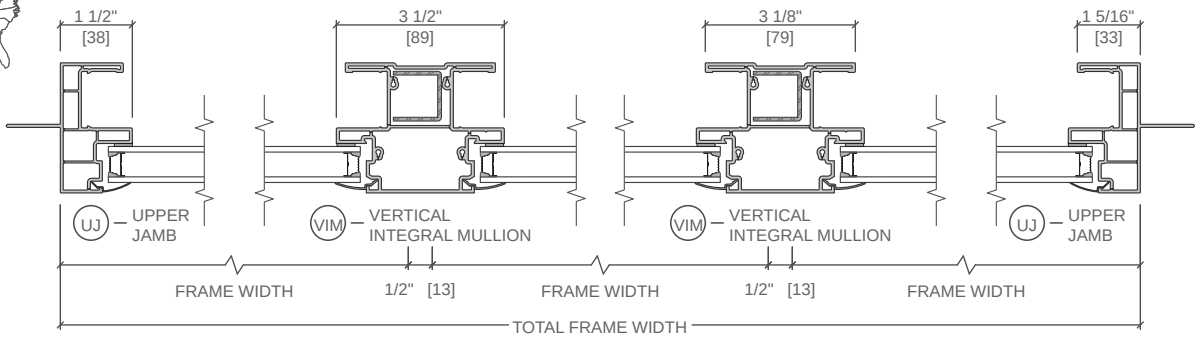

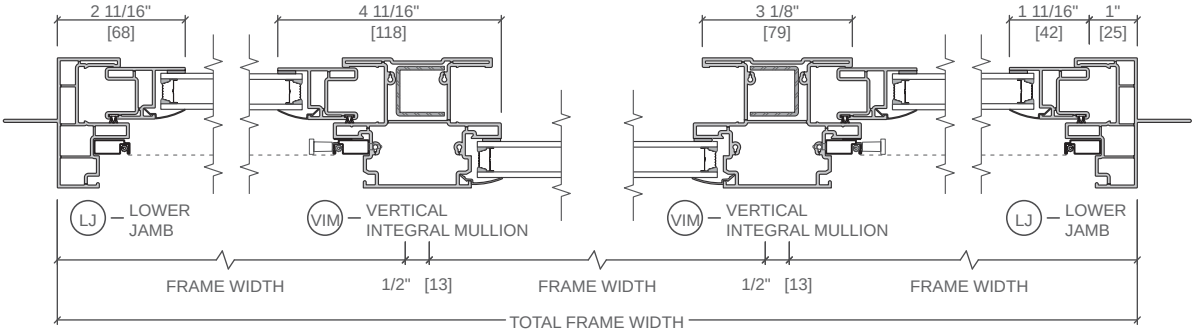

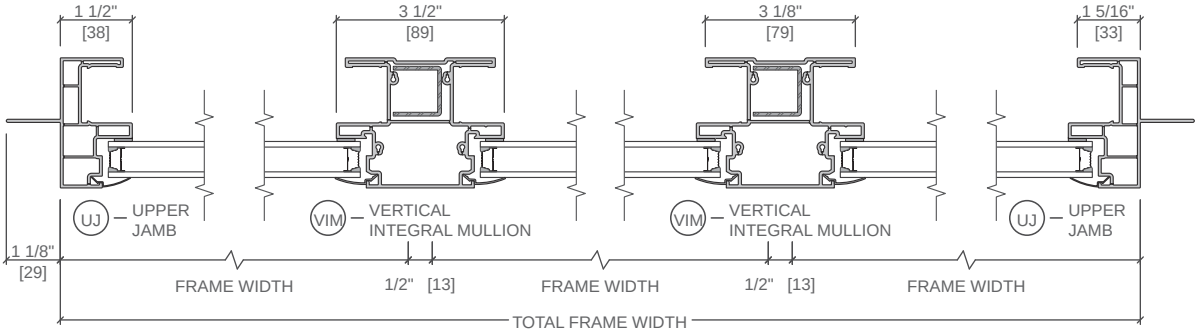

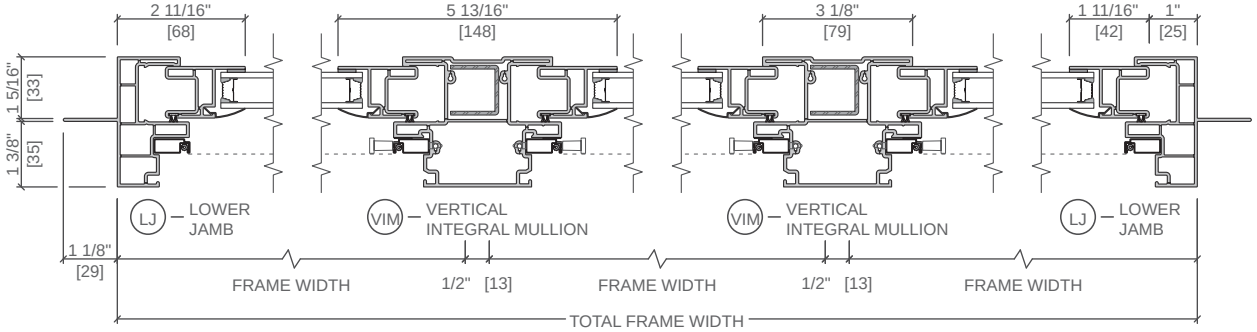

Scale 3" = 1' 0"

All dimensions are approximate.

Encompass by Pella® Single-Hung Window

Unit Sections - 2-11/16" Replacement Frame, West Region

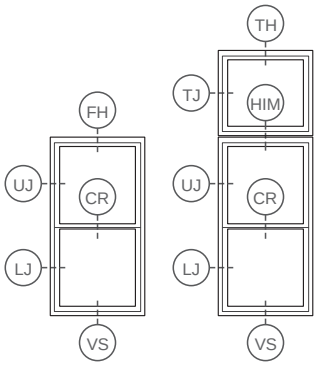

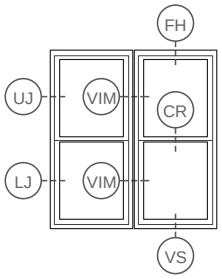

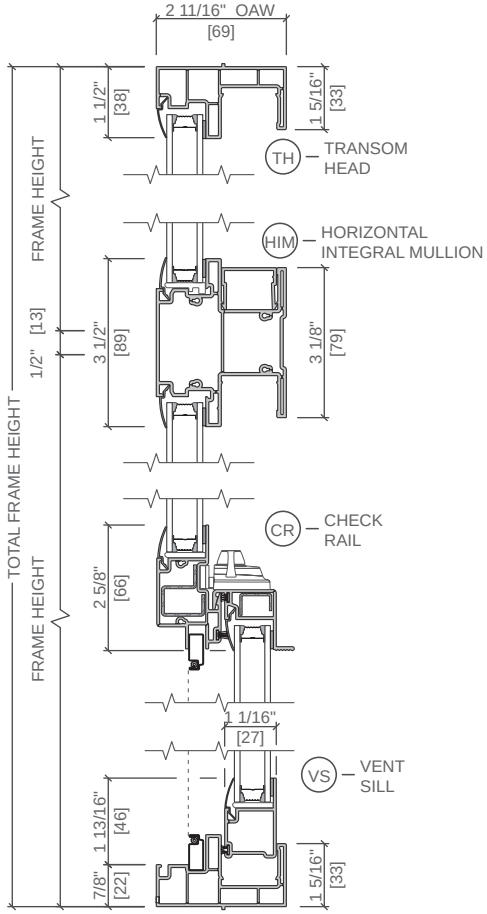

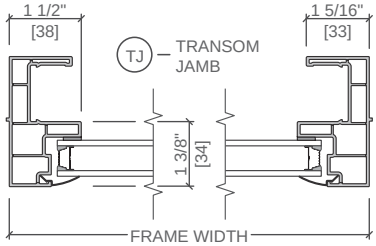

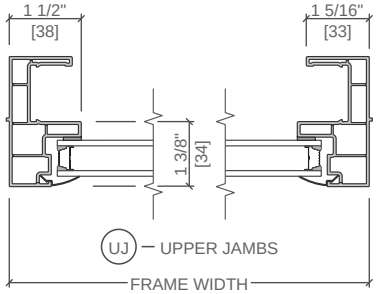

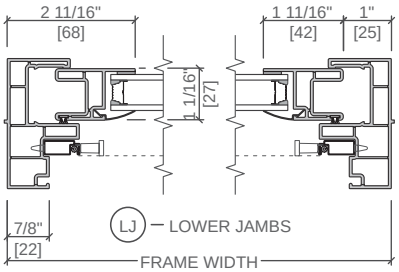

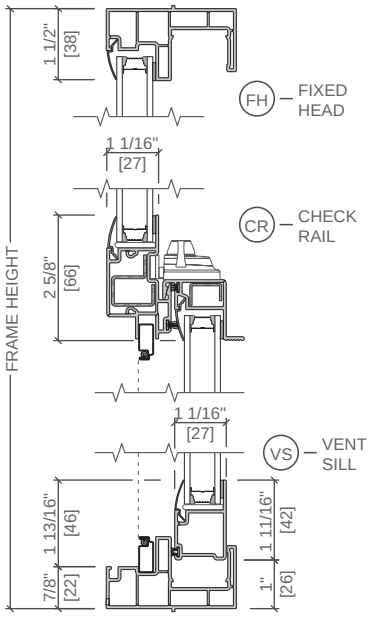

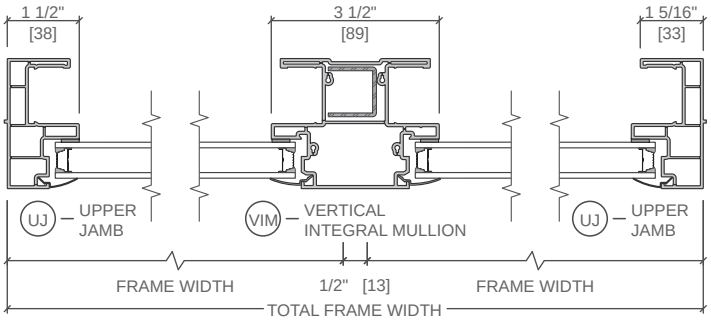

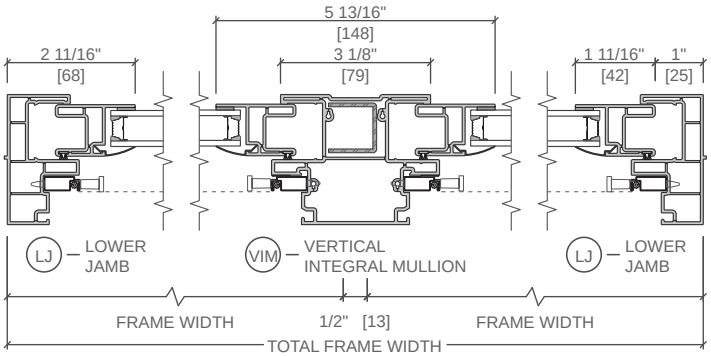

West Region Only

Scale 3" = 1' 0"
All dimensions are approximate.

Encompass by Pella® Single-Hung Window

Unit Sections - 2-11/16" Replacement Frame, West Region

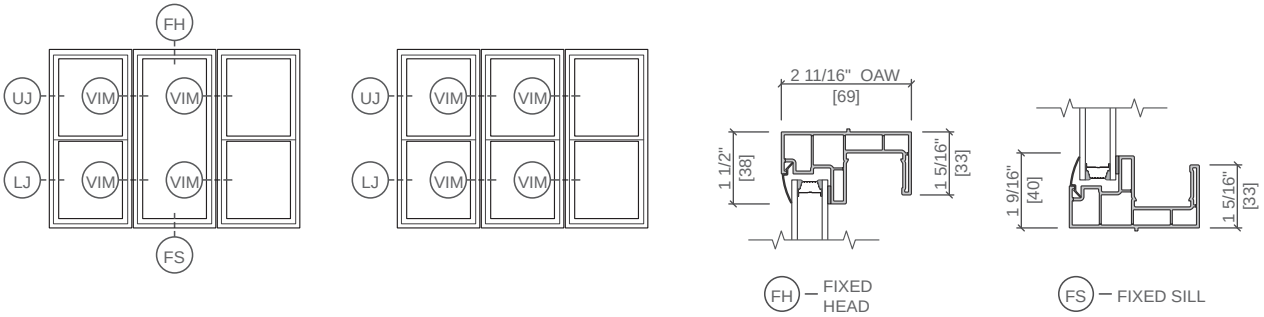

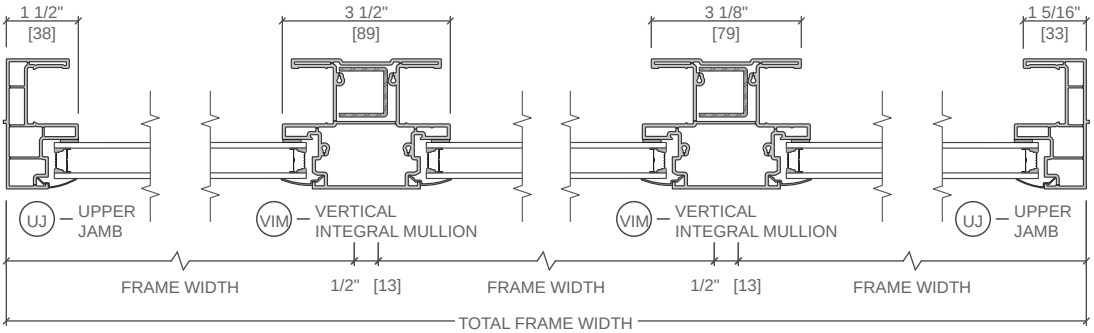

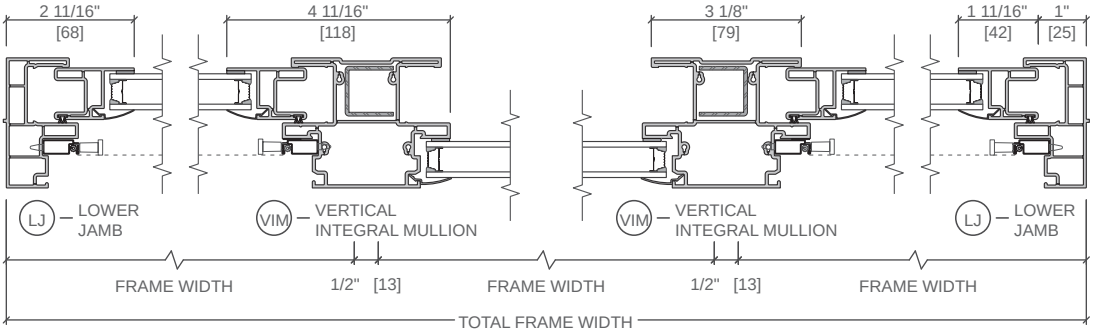

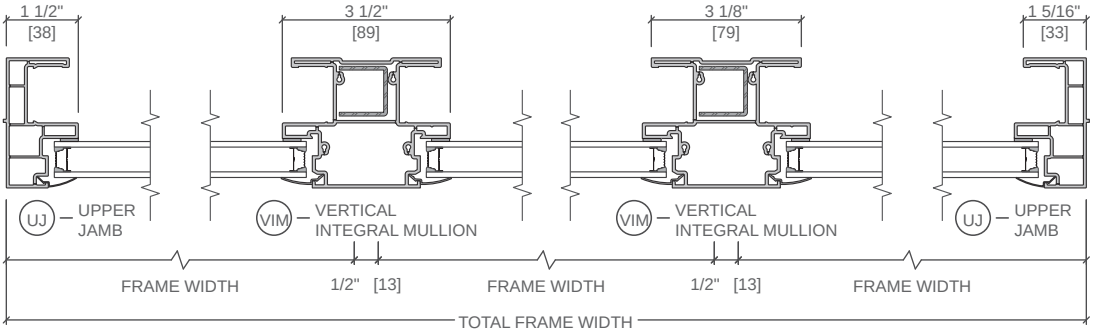

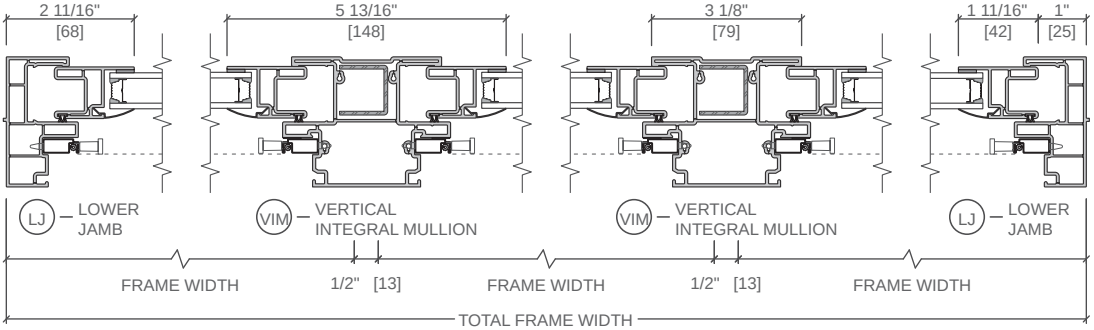

West Region Only

Scale 3" = 1' 0"
All dimensions are approximate.