Product Selection Guide
- Size and Performance Data ..... F-CM-2
- Features and Options ..... F-CM-3

Glazing Performance
- Vent Dual-Pane ..... F-CM-4
- Vent Dual-Pane Laminated for Sound ..... F-CM-12
- Vent Dual-Pane Impact-Resistant Laminated ..... F-CM-13
- Vent Triple-Pane ..... F-CM-14
- Fixed Dual-Pane ..... F-CM-15
- Fixed Dual-Pane Laminated for Sound ..... F-CM-23
- Fixed Dual-Pane Impact-Resistant Laminated ..... F-CM-24
- Fixed Triple-Pane ..... F-CM-26

Combination Assemblies ..... F-CM-28

Grille Types ..... F-CM-28

Size Tables ..... F-CM-29

Design Data – Special Sizes and Dimensions ..... F-CM-31

Impact-Resistant – Certifications and Approvals ..... F-CM-32

Design Data ..... F-CM-33

Detailed Product Descriptions ..... F-CM-35

Unit Sections
- Frame and Glazing Types Overview ..... F-CM-36
- Block Frame, 11/16" Glazing ..... F-CM-37
- Integral Fin, 11/16" Glazing ..... F-CM-38
- Block Frame, Triple-Pane 1" Glazing ..... F-CM-39
- Integral Fin, Triple-Pane 1" Glazing ..... F-CM-40
- Block Frame, Impact-Resistant Laminated 1" Glazing ..... F-CM-41
- Integral Fin, Laminated 1" Glazing ..... F-CM-42

### Supporting documents for this product:

Test Reports:
https://media.pella.com/professional/adm/CertificationReports/Test_Reports_IMP.pdf

CSI Specs (readable using Microsft Word or other text editing application):
https://media.pella.com/professional/adm/Fiberglass-CSI_Specs/08572_CMAW.rtf

AIA Masterspec (readable using Microsft Word or other text editing application):
https://media.pella.com/professional/adm/Fiberglass-CSI_Specs/085413_fl.doc

Detailed Product Description (readable using Microsft Word or other text editing application):
https://media.pella.com/professional/adm/Fiberglass/F2-CM.rtf

Size Tables (requires appropriate CAD software to read and use):
https://media.pella.com/professional/adm/Fiberglass/IMP-CM-Elev_D.dwg

CAD cross sections (requires appropriate CAD software to read and use):
https://media.pella.com/professional/adm/Fiberglass/IMP-CM-Detail_D.dwg

3D & BIM (requires appropriate software to read and use):
https://media.pella.com/professional/adm/RevitFiles/Imp-Revit/Window-Casement-Pella-Impervia.zip

Sketchup (requires appropriate software to read and use):
https://media.pella.com/professional/adm/Fiberglass/PellaSKP_Impervia_Casement.zip

Combination Recommendations:
https://media.pella.com/professional/adm/Fiberglass/F2_Combinations.pdf

Installation Details:
https://media.pella.com/professional/adm/Fiberglass/Pella-Impervia_InstallationDetails.pdf

The information published in this document is believed to be accurate at the time of publication. However, because we are constantly working to improve our products, specifications are subject to change without notice. Consult your local Pella representative for up-to-date product information.

Microsoft and Microsoft Word are registered trademarks of Microsoft Corp.

Size and Performance Data

| | Casement |
|---|---|
| **Sizes** | |
| Standard Vent/Fixed | ● |
| Standard Fixed Companion Sizes | ● |
| Transom Sizes | ● |
| Egress Sizes | ● |
| Special Sizes | ● |
| **Performance**[1] | |
| Meets or Exceeds AAMA/WDMA Ratings | C-LC45 – LC +50/-60<br>Hallmark Certified |
| Air Infiltration (cfm/ft² of frame @ 1.57 psf wind pressure) | 0.05 |
| Water Resistance | 6.75 – 7.5 psf |
| Design Pressure | 45 – 50 psf |
| Products with Impact-Resistant Laminated Glass<br>Meets or Exceeds AAMA / WDMA Ratings | C-LC +50/-50<br>Missle C, Windzone 2<br>Hallmark Certified |
| **Other Performance Criteria** | |
| Forced Entry Resistance Level (Minimum Security Grade)[2] | 40 |
| Roto-Operator Maximum Operating Force (lb) Initiate Motion/Maintain Motion | 15/6 |
| Easy-Slide Operator Maximum Operating Force (lb) Initiate Motion/Maintain Motion | 10/7 |
| Easy-Slide Operator with Accessibility Lock Lever - Operating Force (lb) Initiate Motion/Maintain Motion (Available for select sizes only)<br>Size requirements: Frame Width is ≤ 35" and Frame Height is ≤ 72.5" or Frame Width is > 35" but ≤ 36" and Frame Height is ≤ 60"<br>Review Local and Federal requirements for guidance on install height and other considerations to meet ADA compliance. | 5/5 |

Sound Transmission Class / Outdoor-Indoor Transmission Class

| Product | Frame Size Tested[3] | Glazing System | | | | STC Rating | OITC Rating |
|---|---|---|---|---|---|---|---|
| | | Overall Glazing Thickness | Exterior Glass Thickness | Middle Glass Thickness | Interior Glass Thickness | | |
| VENT | 23-1/2" x 59" | 11/16" | 3mm | — | 3mm | 28 | 25 |
| | 23-1/2" x 59" | 11/16" | 4mm | — | 4mm | 31 | 26 |
| | 23-1/2" x 59" | 11/16" | 5mm | — | 3mm | 32 | 27 |
| | 23-1/2" x 59" | 1" | 3mm | 3mm | 3mm | 29 | 24 |
| | 23-1/2" x 59" | 1" | 4mm | — | 6mm | 34 | 28 |
| | 23-1/2" x 59" | 1" | 5mm | — | 3mm | 34 | 28 |
| | 23-1/2" x 59" | 1" | 5mm | — | 5mm | 30 | 24 |
| | 23-1/2" x 59" | 1" | 6mm | — | 6mm | 32 | 26 |
| | 23-1/2" x 59" | 1" | 4mm | — | 7mm PVB Laminated | 33 | 27 |
| | 23-1/2" x 59" | 1" | 5mm | — | 10mm PVB Laminated | 37 | 32 |
| FIXED | 47" x 59" | 11/16" | 3mm | — | 3mm | 28 | 24 |
| | 47" x 59" | 11/16" | 4mm | — | 4mm | 29 | 25 |
| | 47" x 59" | 11/16" | 5mm | — | 3mm | 31 | 26 |
| | 47" x 59" | 1" | 3mm | 3mm | 3mm | 29 | 24 |
| | 47" x 59" | 1" | 4mm | 4mm | 4mm | 30 | 26 |
| | 47" x 59" | 1" | 4mm | — | 6mm | 33 | 28 |
| | 47" x 59" | 1" | 5mm | — | 3mm | 32 | 27 |
| | 47" x 59" | 1" | 5mm | — | 5mm | 30 | 25 |
| | 47" x 59" | 1" | 6mm | — | 6mm | 30 | 24 |
| | 47" x 59" | 1" | 4mm | — | 7mm PVB Laminated | 34 | 29 |
| | 47" x 59" | 1" | 5mm | — | 10mm PVB Laminated | 36 | 31 |

(1) See Design Data pages in this section for specific product performance class and grade values.

(2) The higher the level, the greater the product's ability to resist forced entry.

(3) ASTM E 1425 defines standard sizes for acoustical testing. Ratings achieved at that size are representative of all sizes of the same configuration.

## Features and Options

| | Block Frame | Integral Nailing Fin |
|---|---|---|
| **Glazing** | | |
| **Glazing Type** | | |
| Dual-pane Insulating Glass | S | S |
| Triple-pane Insulating Glass | O | O |
| **Insulated Glass Options / Low-E Types** | | |
| Clear Insulating Glass (no Low-E coating) | S | S |
| Advanced Low-E Insulating Glass | O | O |
| SunDefense™ Low-E Insulating Glass | O | O |
| SunDefense+ Low-E Insulating Glass | O | O |
| AdvancedComfort Low-E Insulating Glass | O | O |
| NaturalSun Low-E Insulating Glass | O | O |
| NaturalSun+ Low-E Insulating Glass | O | O |
| **Additional Glass Options** | | |
| Annealed Glass | S | S |
| Tempered Glass | O | O |
| Impact-Resistant Laminated Glass | O | — |
| Noise reduction glass (5/3mm, 4/6mm combinations) | O | O |
| Noise Reduction laminated glass (non-impact) | O | O |
| Tinted glass (Bronze, Gray, Green) Advanced Low-E | O | O |
| Obscure Glass[1] | O | O |
| **Gas Fill / High Altitude** | | |
| Argon | S | S |
| High Altitude | O | O |
| High Altitude with argon | O | O |
| **Exterior / Interior Factory Pre-finish Colors** | | |
| Powder-Coat White | S | S |
| Powder-Coat Brown, Black, Tan or Morning Sky Gray | O | O |
| Powder-Coat Dual-color (Brown, Black, Tan or Morning Sky Gray Exterior with White interior) | O | — |
| **Hardware** | | |
| Match interior finish | S | S |
| Tan, Morning Sky Gray, Satin Nickel[2] | O | O |
| **Operator** | | |
| Easy-Slide Operator | S | S |
| Fold Away Crank | O | O |
| **Sash Locks** | | |
| Accessibility Lock Handle | O | O |
| Unison Lock System[3] | S | S |
| **Screens** | | |
| InView™ screen | O | O |
| **Grilles** | | |
| **Grilles-Between-the-Glass** | | |
| Traditional, Prairie, Top Row and Custom - Equally Divided | O | O |

S = Standard; O = Optional; (—) = Not available

(1) Contact your local Pella sales representative for current offering.

(2) Satin Nickel is not available for Easy-Slide operator.

(3) Unit size determines availability.

## Glazing Performance – Total Unit

| Glazing Thickness | Type of Glazing | NFRC Certified Product # | Glass (mm) | | Gap Fill | Performance Values[1] | | | | Shaded Areas Meet ENERGY STAR® Performance Criteria in Zones Shown | | | | | |
|---|---|---|---|---|---|---|---|---|---|---|---|---|---|---|---|
| | | | Ext. | Int. | | U-Factor | SHGC | VLT | CR | U. S. Zone | | | | Canada[2] ER | Canada[2] Zone |
| | | | | | | | | | | N | NC | SC | S | | CA |
| **Vent** | | | | | | | | | | | | | | | |
| 11/16" | Clear IG | PEL-N-277-00225-00001 | 3 | 3 | air | 0.44 | 0.55 | 0.58 | 44 | | | | | | |
| | with grilles-between-the-glass | PEL-N-277-00226-00001 | | | | 0.45 | 0.50 | 0.52 | 44 | | | | | | |
| 11/16" | Clear IG | PEL-N-277-00229-00001 | 4 | 4 | air | 0.45 | 0.53 | 0.57 | 43 | | | | | | |
| | with grilles-between-the-glass | PEL-N-277-00230-00001 | | | | 0.46 | 0.49 | 0.52 | 43 | | | | | | |
| 1" | Clear IG | PEL-N-277-00001-00001 | 5 | 5 | air | 0.43 | 0.53 | 0.57 | 44 | | | | | | |
| | with grilles-between-the-glass | PEL-N-277-00002-00001 | | | | 0.43 | 0.48 | 0.51 | 44 | | | | | | |
| 1" | Clear IG | PEL-N-277-00005-00001 | 6 | 6 | air | 0.43 | 0.51 | 0.56 | 44 | | | | | | |
| | with grilles-between-the-glass | PEL-N-277-00006-00001 | | | | 0.43 | 0.46 | 0.50 | 44 | | | | | | |
| 11/16" | Advanced Low-E IG | PEL-N-277-00235-00001 | 3 | 3 | argon | 0.28 | 0.26 | 0.49 | 60 | | | | | | |
| | with grilles-between-the-glass | PEL-N-277-00236-00001 | | | | 0.29 | 0.24 | 0.44 | 60 | | | | | | |
| 11/16" | Advanced Low-E IG | PEL-N-277-00239-00001 | 4 | 4 | argon | 0.30 | 0.26 | 0.48 | 58 | | | | | | |
| | with grilles-between-the-glass | PEL-N-277-00240-00001 | | | | 0.31 | 0.24 | 0.44 | 58 | | | | | | |
| 1" | Advanced Low-E IG | PEL-N-277-00019-00001 | 5 | 5 | argon | 0.28 | 0.26 | 0.48 | 59 | | | | | | |
| | with grilles-between-the-glass | PEL-N-277-00020-00001 | | | | 0.28 | 0.24 | 0.43 | 59 | | | | | | |
| 1" | Advanced Low-E IG | PEL-N-277-00023-00001 | 6 | 6 | argon | 0.28 | 0.25 | 0.47 | 58 | | | | | | |
| | with grilles-between-the-glass | PEL-N-277-00024-00001 | | | | 0.28 | 0.23 | 0.43 | 58 | | | SC | S | | |
| 11/16" | SunDefense™ IG | PEL-N-277-00243-00001 | 3 | 3 | argon | 0.28 | 0.20 | 0.45 | 60 | | | SC | S | | |
| | with grilles-between-the-glass | PEL-N-277-00244-00001 | | | | 0.29 | 0.18 | 0.41 | 60 | | | | S | | |
| 11/16" | SunDefense™ IG | PEL-N-277-00247-00001 | 4 | 4 | argon | 0.29 | 0.20 | 0.45 | 58 | | | | S | | |
| | with grilles-between-the-glass | PEL-N-277-00248-00001 | | | | 0.30 | 0.18 | 0.41 | 58 | | | | S | | |
| 11/16" | SunDefense+ IG | PEL-N-277-00835-00001 | 3 | 3 | argon | 0.25 | 0.19 | 0.44 | 48 | | NC | SC | S | | |
| | with grilles-between-the-glass | PEL-N-277-00300-00001 | | | | 0.25 | 0.18 | 0.40 | 48 | | NC | SC | S | | |
| 11/16" | SunDefense+ IG | PEL-N-277-00303-00001 | 4 | 4 | argon | 0.26 | 0.19 | 0.44 | 46 | | | SC | S | | |
| | with grilles-between-the-glass | PEL-N-277-00304-00001 | | | | 0.27 | 0.18 | 0.40 | 46 | | | SC | S | | |
| 1" | SunDefense™ IG | PEL-N-277-00059-00001 | 5 | 5 | argon | 0.28 | 0.20 | 0.44 | 59 | | | SC | S | | |
| | with grilles-between-the-glass | PEL-N-277-00060-00001 | | | | 0.28 | 0.18 | 0.40 | 59 | | | SC | S | | |
| 1" | SunDefense™ IG | PEL-N-277-00063-00001 | 6 | 6 | argon | 0.28 | 0.20 | 0.44 | 59 | | | SC | S | | |
| | with grilles-between-the-glass | PEL-N-277-00064-00001 | | | | 0.28 | 0.18 | 0.40 | 59 | | | SC | S | | |
| 1" | SunDefense+ IG | PEL-N-277-00867-00001 | 5 | 5 | argon | 0.25 | 0.19 | 0.43 | 47 | | NC | SC | S | | |
| | with grilles-between-the-glass | PEL-N-277-00868-00001 | | | | 0.25 | 0.18 | 0.39 | 47 | | NC | SC | S | | |
| 1" | SunDefense+ IG | PEL-N-277-00871-00001 | 6 | 6 | argon | 0.25 | 0.19 | 0.43 | 46 | | NC | SC | S | | |
| | with grilles-between-the-glass | PEL-N-277-00872-00001 | | | | 0.25 | 0.18 | 0.39 | 46 | | NC | SC | S | | |
| 11/16" | AdvancedComfort Low-E IG | PEL-N-277-00827-00001 | 3 | 3 | argon | 0.25 | 0.26 | 0.48 | 48 | | NC | | | | |
| | with grilles-between-the-glass | PEL-N-277-00260-00001 | | | | 0.26 | 0.24 | 0.43 | 47 | | | | | | |
| 11/16" | AdvancedComfort Low-E IG | PEL-N-277-00263-00001 | 4 | 4 | argon | 0.26 | 0.26 | 0.47 | 45 | | | | | | |
| | with grilles-between-the-glass | PEL-N-277-00264-00001 | | | | 0.27 | 0.23 | 0.43 | 45 | | | SC | S | | |
| 1" | AdvancedComfort Low-E IG | PEL-N-277-00859-00001 | 5 | 5 | argon | 0.25 | 0.25 | 0.47 | 46 | | NC | | | | |
| | with grilles-between-the-glass | PEL-N-277-00860-00001 | | | | 0.25 | 0.23 | 0.42 | 46 | | NC | SC | S | | |
| 1" | AdvancedComfort Low-E IG | PEL-N-277-00863-00001 | 6 | 6 | argon | 0.25 | 0.25 | 0.46 | 46 | | NC | | | | |
| | with grilles-between-the-glass | PEL-N-277-00864-00001 | | | | 0.25 | 0.23 | 0.42 | 46 | | NC | SC | S | | |
| 11/16" | NaturalSun Low-E IG | PEL-N-277-00251-00001 | 3 | 3 | argon | 0.29 | 0.48 | 0.55 | 59 | | | | | | |
| | with grilles-between-the-glass | PEL-N-277-00252-00001 | | | | 0.30 | 0.44 | 0.50 | 59 | | | | | | |
| 11/16" | NaturalSun Low-E IG | PEL-N-277-00255-00001 | 4 | 4 | argon | 0.30 | 0.47 | 0.55 | 57 | | | | | | |
| | with grilles-between-the-glass | PEL-N-277-00256-00001 | | | | 0.32 | 0.43 | 0.50 | 57 | | | | | | |
| 11/16" | NaturalSun+ Low-E IG | PEL-N-277-00819-00001 | 3 | 3 | argon | 0.26 | 0.44 | 0.54 | 47 | N | | | | | |
| | with grilles-between-the-glass | PEL-N-277-00820-00001 | | | | 0.26 | 0.40 | 0.49 | 47 | N | | | | | |
| 11/16" | NaturalSun+ Low-E IG | PEL-N-277-00823-00001 | 4 | 4 | argon | 0.26 | 0.43 | 0.54 | 45 | N | | | | | |
| | with grilles-between-the-glass | PEL-N-277-00824-00001 | | | | 0.27 | 0.39 | 0.49 | 45 | | | | | | |
| 1" | NaturalSun Low-E IG | PEL-N-277-00075-00001 | 5 | 5 | argon | 0.29 | 0.47 | 0.54 | 58 | | | | | | |
| | with grilles-between-the-glass | PEL-N-277-00076-00001 | | | | 0.29 | 0.43 | 0.49 | 58 | | | | | | |
| 1" | NaturalSun Low-E IG | PEL-N-277-00079-00001 | 6 | 6 | argon | 0.29 | 0.45 | 0.54 | 58 | | | | | | |
| | with grilles-between-the-glass | PEL-N-277-00080-00001 | | | | 0.29 | 0.41 | 0.49 | 58 | | | | | | |
| 1" | NaturalSun+ Low-E IG | PEL-N-277-00851-00001 | 5 | 5 | argon | 0.26 | 0.42 | 0.53 | 46 | N | | | | | |
| | with grilles-between-the-glass | PEL-N-277-00852-00001 | | | | 0.26 | 0.39 | 0.48 | 46 | | | | | | |
| 1" | NaturalSun+ Low-E IG | PEL-N-277-00855-00001 | 6 | 6 | argon | 0.26 | 0.41 | 0.52 | 45 | N | | | | | |
| | with grilles-between-the-glass | PEL-N-277-00856-00001 | | | | 0.26 | 0.38 | 0.47 | 45 | | | | | | |

(1) Glazing performance values are calculated based on NFRC 100, NFRC 200 and NFRC 500. ENERGY STAR® values are updated to 2023 (version 7) criteria.
(2) The values shown are based on Canada's updated ENERGY STAR® 2020 initiative.
For center-glass values, see the Product Performance section.
Visit www.energystar.gov for Energy Star guidelines.

R-Value = 1/U-Factor
SHGC = Solar Heat Gain Coefficient
VLT % = Visible Light Transmission
CR = Condensation Resistance
ER = Canadian Energy Rating

## Glazing Performance – Total Unit

| Glazing Thickness | Type of Glazing | NFRC Certified Product # | Glass (mm) | | Gap Fill | Performance Values[1] | | | | Shaded Areas Meet ENERGY STAR® Performance Criteria in Zones Shown | | | | | |
|---|---|---|---|---|---|---|---|---|---|---|---|---|---|---|---|
| | | | Ext. | Int. | | U-Factor | SHGC | VLT | CR | U. S. Zone | | | | Canada[2] ER | Canada[2] Zone |
| | | | | | | | | | | N | NC | SC | S | | CA |
| **Vent — with Foam Insulation** | | | | | | | | | | | | | | | |
| 11/16" | Advanced Low-E IG | PEL-N-277-00567-00001 | 3 | 3 | argon | 0.27 | 0.26 | 0.49 | 60 | | | | | | |
| | with grilles-between-the-glass | PEL-N-277-00568-00001 | | | | 0.28 | 0.24 | 0.44 | 60 | | | | | | |
| 11/16" | Advanced Low-E IG | PEL-N-277-00571-00001 | 4 | 4 | argon | 0.29 | 0.26 | 0.48 | 58 | | | | | | |
| | with grilles-between-the-glass | PEL-N-277-00572-00001 | | | | 0.30 | 0.24 | 0.44 | 58 | | | | | | |
| 1" | Advanced Low-E IG | PEL-N-277-00351-00001 | 5 | 5 | argon | 0.27 | 0.26 | 0.48 | 59 | | | | | | |
| | with grilles-between-the-glass | PEL-N-277-00352-00001 | | | | 0.27 | 0.24 | 0.43 | 59 | | | | | | |
| 1" | Advanced Low-E IG | PEL-N-277-00355-00001 | 6 | 6 | argon | 0.27 | 0.25 | 0.47 | 58 | | | | | | |
| | with grilles-between-the-glass | PEL-N-277-00356-00001 | | | | 0.27 | 0.23 | 0.43 | 58 | | | SC | S | | |
| 11/16" | SunDefense IG | PEL-N-277-00575-00001 | 3 | 3 | argon | 0.27 | 0.20 | 0.45 | 61 | | | SC | S | | |
| | with grilles-between-the-glass | PEL-N-277-00576-00001 | | | | 0.28 | 0.18 | 0.41 | 61 | | | SC | S | | |
| 11/16" | SunDefense IG | PEL-N-277-00579-00001 | 4 | 4 | argon | 0.28 | 0.20 | 0.45 | 58 | | | SC | S | | |
| | with grilles-between-the-glass | PEL-N-277-00580-00001 | | | | 0.29 | 0.18 | 0.41 | 58 | | | | S | | |
| 11/16" | SunDefense+ IG | PEL-N-277-01667-00001 | 3 | 3 | argon | 0.24 | 0.19 | 0.44 | 48 | | NC | SC | S | | |
| | with grilles-between-the-glass | PEL-N-277-01668-00001 | | | | 0.24 | 0.18 | 0.40 | 48 | | NC | SC | S | | |
| 11/16" | SunDefense+ IG | PEL-N-277-01671-00001 | 4 | 4 | argon | 0.25 | 0.19 | 0.44 | 46 | | NC | SC | S | | |
| | with grilles-between-the-glass | PEL-N-277-01672-00001 | | | | 0.26 | 0.18 | 0.40 | 46 | | | SC | S | | |
| 1" | SunDefense IG | PEL-N-277-00391-00001 | 5 | 5 | argon | 0.27 | 0.20 | 0.44 | 59 | | | SC | S | | |
| | with grilles-between-the-glass | PEL-N-277-00392-00001 | | | | 0.27 | 0.18 | 0.40 | 59 | | | SC | S | | |
| 1" | SunDefense IG | PEL-N-277-00395-00001 | 6 | 6 | argon | 0.27 | 0.20 | 0.44 | 59 | | | SC | S | | |
| | with grilles-between-the-glass | PEL-N-277-00396-00001 | | | | 0.27 | 0.18 | 0.40 | 59 | | | SC | S | | |
| 1" | SunDefense+ IG | PEL-N-277-01699-00001 | 5 | 5 | argon | 0.25 | 0.19 | 0.43 | 47 | | NC | SC | S | | |
| | with grilles-between-the-glass | PEL-N-277-01700-00001 | | | | 0.25 | 0.18 | 0.39 | 47 | | NC | SC | S | | |
| 1" | SunDefense+ IG | PEL-N-277-01703-00001 | 6 | 6 | argon | 0.25 | 0.19 | 0.43 | 46 | | NC | SC | S | | |
| | with grilles-between-the-glass | PEL-N-277-01704-00001 | | | | 0.25 | 0.18 | 0.39 | 46 | | NC | SC | S | | |
| 11/16" | AdvancedComfort Low-E IG | PEL-N-277-01659-00001 | 3 | 3 | argon | 0.25 | 0.26 | 0.48 | 48 | | NC | | | | |
| | with grilles-between-the-glass | PEL-N-277-01660-00001 | | | | 0.25 | 0.24 | 0.43 | 48 | | NC | | | | |
| 11/16" | AdvancedComfort Low-E IG | PEL-N-277-01663-00001 | 4 | 4 | argon | 0.26 | 0.26 | 0.47 | 46 | | | | | | |
| | with grilles-between-the-glass | PEL-N-277-01664-00001 | | | | 0.26 | 0.23 | 0.43 | 46 | | | SC | S | | |
| 1" | AdvancedComfort Low-E IG | PEL-N-277-01691-00001 | 5 | 5 | argon | 0.25 | 0.25 | 0.47 | 46 | | NC | | | | |
| | with grilles-between-the-glass | PEL-N-277-01692-00001 | | | | 0.25 | 0.23 | 0.42 | 46 | | NC | SC | S | | |
| 1" | AdvancedComfort Low-E IG | PEL-N-277-01695-00001 | 6 | 6 | argon | 0.25 | 0.25 | 0.46 | 46 | | NC | | | | |
| | with grilles-between-the-glass | PEL-N-277-01696-00001 | | | | 0.25 | 0.23 | 0.42 | 46 | | NC | SC | S | | |
| 11/16" | NaturalSun Low-E IG | PEL-N-277-00583-00001 | 3 | 3 | argon | 0.28 | 0.48 | 0.55 | 59 | | | | | | |
| | with grilles-between-the-glass | PEL-N-277-00584-00001 | | | | 0.29 | 0.44 | 0.50 | 59 | | | | | | |
| 11/16" | NaturalSun Low-E IG | PEL-N-277-00587-00001 | 4 | 4 | argon | 0.29 | 0.47 | 0.55 | 57 | | | | | | |
| | with grilles-between-the-glass | PEL-N-277-00588-00001 | | | | 0.30 | 0.43 | 0.50 | 57 | | | | | | |
| 11/16" | NaturalSun+ Low-E IG | PEL-N-277-01651-00001 | 3 | 3 | argon | 0.25 | 0.44 | 0.54 | 47 | N | | | | | |
| | with grilles-between-the-glass | PEL-N-277-01652-00001 | | | | 0.25 | 0.40 | 0.49 | 47 | N | NC | | | | |
| 11/16" | NaturalSun+ Low-E IG | PEL-N-277-01655-00001 | 4 | 4 | argon | 0.26 | 0.43 | 0.54 | 45 | N | | | | | |
| | with grilles-between-the-glass | PEL-N-277-01656-00001 | | | | 0.27 | 0.39 | 0.49 | 45 | | | | | | |
| 1" | NaturalSun Low-E IG | PEL-N-277-00407-00001 | 5 | 5 | argon | 0.28 | 0.47 | 0.54 | 58 | | | | | | |
| | with grilles-between-the-glass | PEL-N-277-00408-00001 | | | | 0.28 | 0.43 | 0.49 | 58 | | | | | | |
| 1" | NaturalSun Low-E IG | PEL-N-277-00411-00001 | 6 | 6 | argon | 0.28 | 0.45 | 0.54 | 58 | | | | | | |
| | with grilles-between-the-glass | PEL-N-277-00412-00001 | | | | 0.28 | 0.41 | 0.49 | 58 | | | | | | |
| 1" | NaturalSun+ Low-E IG | PEL-N-277-01683-00001 | 5 | 5 | argon | 0.25 | 0.42 | 0.53 | 46 | N | | | | | |
| | with grilles-between-the-glass | PEL-N-277-01684-00001 | | | | 0.25 | 0.39 | 0.48 | 46 | | NC | | | | |
| 1" | NaturalSun+ Low-E IG | PEL-N-277-01687-00001 | 6 | 6 | argon | 0.25 | 0.41 | 0.52 | 45 | N | | | | | |
| | with grilles-between-the-glass | PEL-N-277-01688-00001 | | | | 0.25 | 0.38 | 0.47 | 45 | | NC | | | | |

R-Value = 1/U-Factor
SHGC = Solar Heat Gain Coefficient
VLT % = Visible Light Transmission
CR = Condensation Resistance
ER = Canadian Energy Rating

(1) Glazing performance values are calculated based on NFRC 100, NFRC 200 and NFRC 500.
ENERGY STAR® values are updated to 2023 (version 7) criteria.
(2) The values shown are based on Canada's updated ENERGY STAR® 2020 initiative.
For center-glass values, see the Product Performance section.
Visit www.energystar.gov for Energy Star guidelines.

**Climate Zones**

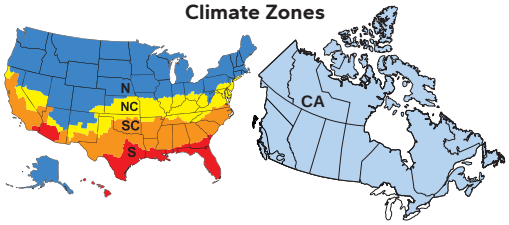

## Glazing Performance – Total Unit

| Glazing Thickness | Type of Glazing | NFRC Certified Product # | Glass (mm) Ext. | Glass (mm) Int. | Gap Fill | Performance Values[1] U-Factor | SHGC | VLT | CR | Shaded Areas Meet ENERGY STAR® Performance Criteria in Zones Shown U. S. Zone N | NC | SC | S | Canada[2] ER | Canada[2] Zone |
|---|---|---|---|---|---|---|---|---|---|---|---|---|---|---|---|
| **Vent — High Altitude Glazing** | | | | | | | | | | | | | | | CA |
| 11/16" | (HA) Advanced Low-E IG | PEL-N-277-00233-00001 | 3 | 3 | air | 0.32 | 0.27 | 0.49 | 56 | | | | | | |
| | with grilles-between-the-glass | PEL-N-277-00234-00001 | | | | 0.33 | 0.24 | 0.44 | 56 | | | | | | |
| 11/16" | (HA) Advanced Low-E IG | PEL-N-277-00237-00001 | 4 | 4 | air | 0.34 | 0.27 | 0.48 | 53 | | | | | | |
| | with grilles-between-the-glass | PEL-N-277-00238-00001 | | | | 0.35 | 0.24 | 0.44 | 53 | | | | | | |
| 1" | (HA) Advanced Low-E IG | PEL-N-277-00017-00001 | 5 | 5 | air | 0.32 | 0.26 | 0.48 | 56 | | | | | | |
| | with grilles-between-the-glass | PEL-N-277-00018-00001 | | | | 0.32 | 0.24 | 0.43 | 56 | | | | | | |
| 1" | (HA) Advanced Low-E IG | PEL-N-277-00021-00001 | 6 | 6 | air | 0.31 | 0.26 | 0.47 | 55 | | | | | | |
| | with grilles-between-the-glass | PEL-N-277-00022-00001 | | | | 0.31 | 0.24 | 0.43 | 55 | | | | | | |
| 11/16" | (HA) SunDefense IG | PEL-N-277-00241-00001 | 3 | 3 | air | 0.32 | 0.20 | 0.45 | 56 | | | | S | | |
| | with grilles-between-the-glass | PEL-N-277-00242-00001 | | | | 0.33 | 0.18 | 0.41 | 56 | | | | | | |
| 11/16" | (HA) SunDefense IG | PEL-N-277-00245-00001 | 4 | 4 | air | 0.33 | 0.20 | 0.45 | 54 | | | | | | |
| | with grilles-between-the-glass | PEL-N-277-00246-00001 | | | | 0.35 | 0.19 | 0.41 | 54 | | | | | | |
| 11/16" | (HA) SunDefense+ IG | PEL-N-277-00297-00001 | 3 | 3 | air | 0.27 | 0.20 | 0.44 | 44 | | | SC | S | | |
| | with grilles-between-the-glass | PEL-N-277-00298-00001 | | | | 0.28 | 0.18 | 0.40 | 44 | | | SC | S | | |
| 11/16" | (HA) SunDefense+ IG | PEL-N-277-00301-00001 | 4 | 4 | air | 0.29 | 0.20 | 0.44 | 42 | | | | S | | |
| | with grilles-between-the-glass | PEL-N-277-00302-00001 | | | | 0.30 | 0.18 | 0.40 | 42 | | | | S | | |
| 1" | (HA) SunDefense IG | PEL-N-277-00057-00001 | 5 | 5 | air | 0.31 | 0.20 | 0.44 | 56 | | | | S | | |
| | with grilles-between-the-glass | PEL-N-277-00058-00001 | | | | 0.31 | 0.18 | 0.40 | 56 | | | | S | | |
| 1" | (HA) SunDefense IG | PEL-N-277-00061-00001 | 6 | 6 | air | 0.31 | 0.20 | 0.44 | 55 | | | | S | | |
| | with grilles-between-the-glass | PEL-N-277-00062-00001 | | | | 0.31 | 0.18 | 0.40 | 55 | | | | S | | |
| 1" | (HA) SunDefense+ IG | PEL-N-277-00865-00001 | 5 | 5 | air | 0.27 | 0.19 | 0.43 | 44 | | | SC | S | | |
| | with grilles-between-the-glass | PEL-N-277-00866-00001 | | | | 0.27 | 0.18 | 0.39 | 44 | | | SC | S | | |
| 1" | (HA) SunDefense+ IG | PEL-N-277-00869-00001 | 6 | 6 | air | 0.27 | 0.19 | 0.43 | 43 | | | SC | S | | |
| | with grilles-between-the-glass | PEL-N-277-00870-00001 | | | | 0.27 | 0.18 | 0.39 | 43 | | | SC | S | | |
| 11/16" | (HA) AdvancedComfort Low-E IG | PEL-N-277-00257-00001 | 3 | 3 | air | 0.28 | 0.26 | 0.48 | 43 | | | | | | |
| | with grilles-between-the-glass | PEL-N-277-00258-00001 | | | | 0.28 | 0.24 | 0.43 | 44 | | | | | | |
| 11/16" | (HA) AdvancedComfort Low-E IG | PEL-N-277-00261-00001 | 4 | 4 | air | 0.29 | 0.26 | 0.47 | 41 | | | | | | |
| | with grilles-between-the-glass | PEL-N-277-00262-00001 | | | | 0.30 | 0.24 | 0.43 | 41 | | | | | | |
| 1" | (HA) AdvancedComfort Low-E IG | PEL-N-277-00857-00001 | 5 | 5 | air | 0.27 | 0.25 | 0.47 | 43 | | | | | | |
| | with grilles-between-the-glass | PEL-N-277-00858-00001 | | | | 0.27 | 0.23 | 0.42 | 43 | | | SC | S | | |
| 1" | (HA) AdvancedComfort Low-E IG | PEL-N-277-00861-00001 | 6 | 6 | air | 0.27 | 0.25 | 0.46 | 43 | | | | | | |
| | with grilles-between-the-glass | PEL-N-277-00862-00001 | | | | 0.27 | 0.23 | 0.42 | 43 | | | SC | S | | |
| 11/16" | (HA) NaturalSun Low-E IG | PEL-N-277-00249-00001 | 3 | 3 | air | 0.33 | 0.48 | 0.55 | 55 | | | | | | |
| | with grilles-between-the-glass | PEL-N-277-00250-00001 | | | | 0.33 | 0.44 | 0.50 | 55 | | | | | | |
| 11/16" | (HA) NaturalSun Low-E IG | PEL-N-277-00253-00001 | 4 | 4 | air | 0.34 | 0.47 | 0.55 | 53 | | | | | | |
| | with grilles-between-the-glass | PEL-N-277-00254-00001 | | | | 0.36 | 0.43 | 0.50 | 53 | | | | | | |
| 11/16" | (HA) NaturalSun+ Low-E IG | PEL-N-277-00817-00001 | 3 | 3 | air | 0.28 | 0.44 | 0.54 | 43 | | | | | | |
| | with grilles-between-the-glass | PEL-N-277-00818-00001 | | | | 0.28 | 0.40 | 0.49 | 43 | | | | | | |
| 11/16" | (HA) NaturalSun+ Low-E IG | PEL-N-277-00821-00001 | 4 | 4 | air | 0.29 | 0.43 | 0.54 | 41 | | | | | | |
| | with grilles-between-the-glass | PEL-N-277-00822-00001 | | | | 0.30 | 0.39 | 0.49 | 41 | | | | | | |
| 1" | (HA) NaturalSun Low-E IG | PEL-N-277-00073-00001 | 5 | 5 | air | 0.32 | 0.47 | 0.54 | 55 | | | | | | |
| | with grilles-between-the-glass | PEL-N-277-00074-00001 | | | | 0.32 | 0.42 | 0.49 | 55 | | | | | | |
| 1" | (HA) NaturalSun Low-E IG | PEL-N-277-00077-00001 | 6 | 6 | air | 0.32 | 0.45 | 0.54 | 54 | | | | | | |
| | with grilles-between-the-glass | PEL-N-277-00078-00001 | | | | 0.32 | 0.41 | 0.49 | 54 | | | | | | |
| 1" | (HA) NaturalSun+ Low-E IG | PEL-N-277-00849-00001 | 5 | 5 | air | 0.28 | 0.42 | 0.53 | 43 | | | | | | |
| | with grilles-between-the-glass | PEL-N-277-00850-00001 | | | | 0.28 | 0.39 | 0.48 | 43 | | | | | | |
| 1" | (HA) NaturalSun+ Low-E IG | PEL-N-277-00853-00001 | 6 | 6 | air | 0.28 | 0.41 | 0.52 | 42 | | | | | | |
| | with grilles-between-the-glass | PEL-N-277-00854-00001 | | | | 0.28 | 0.37 | 0.47 | 42 | | | | | | |

R-Value = 1/U-Factor
SHGC = Solar Heat Gain Coefficient
VLT % = Visible Light Transmission
CR = Condensation Resistance
ER = Canadian Energy Rating

(1) Glazing performance values are calculated based on NFRC 100, NFRC 200 and NFRC 500. ENERGY STAR® values are updated to 2023 (version 7) criteria.

(2) The values shown are based on Canada's updated ENERGY STAR® 2020 initiative. For center-glass values, see the Product Performance section. Visit www.energystar.gov for Energy Star guidelines.

**Climate Zones**

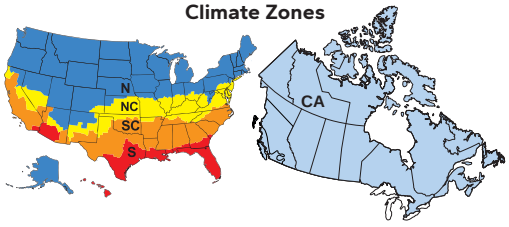

## Glazing Performance – Total Unit

| Glazing Thickness | Type of Glazing | NFRC Certified Product # | Glass (mm) Ext. | Glass (mm) Int. | Gap Fill | Performance Values[1] U-Factor | SHGC | VLT | CR | Shaded Areas Meet ENERGY STAR® Performance Criteria in Zones Shown U. S. Zone N | NC | SC | S | Canada[2] ER | Canada[2] Zone CA |
|---|---|---|---|---|---|---|---|---|---|---|---|---|---|---|---|
| **Vent — High Altitude Glazing with Foam Insulation** | | | | | | | | | | | | | | | |
| 11/16" | (HA) Advanced Low-E IG | PEL-N-277-00565-00001 | 3 | 3 | air | 0.31 | 0.27 | 0.49 | 56 | | | | | | |
| | with grilles-between-the-glass | PEL-N-277-00566-00001 | | | | 0.32 | 0.24 | 0.44 | 56 | | | | | | |
| 11/16" | (HA) Advanced Low-E IG | PEL-N-277-00569-00001 | 4 | 4 | air | 0.33 | 0.27 | 0.48 | 54 | | | | | | |
| | with grilles-between-the-glass | PEL-N-277-00570-00001 | | | | 0.34 | 0.24 | 0.44 | 54 | | | | | | |
| 1" | (HA) Advanced Low-E IG | PEL-N-277-00349-00001 | 5 | 5 | air | 0.31 | 0.26 | 0.48 | 56 | | | | | | |
| | with grilles-between-the-glass | PEL-N-277-00350-00001 | | | | 0.31 | 0.24 | 0.43 | 56 | | | | | | |
| 1" | (HA) Advanced Low-E IG | PEL-N-277-00353-00001 | 6 | 6 | air | 0.30 | 0.26 | 0.47 | 55 | | | | | | |
| | with grilles-between-the-glass | PEL-N-277-00354-00001 | | | | 0.30 | 0.24 | 0.43 | 55 | | | | | | |
| 11/16" | (HA) SunDefense IG | PEL-N-277-00573-00001 | 3 | 3 | air | 0.31 | 0.20 | 0.45 | 57 | | | | S | | |
| | with grilles-between-the-glass | PEL-N-277-00574-00001 | | | | 0.32 | 0.18 | 0.41 | 57 | | | | S | | |
| 11/16" | (HA) SunDefense IG | PEL-N-277-00577-00001 | 4 | 4 | air | 0.32 | 0.20 | 0.45 | 54 | | | | S | | |
| | with grilles-between-the-glass | PEL-N-277-00578-00001 | | | | 0.34 | 0.19 | 0.41 | 54 | | | | | | |
| 11/16" | (HA) SunDefense+ IG | PEL-N-277-01665-00001 | 3 | 3 | air | 0.27 | 0.20 | 0.44 | 44 | | | SC | S | | |
| | with grilles-between-the-glass | PEL-N-277-00630-00001 | | | | 0.27 | 0.18 | 0.40 | 44 | | | SC | S | | |
| 11/16" | (HA) SunDefense+ IG | PEL-N-277-01669-00001 | 4 | 4 | air | 0.28 | 0.20 | 0.44 | 42 | | | SC | S | | |
| | with grilles-between-the-glass | PEL-N-277-01670-00001 | | | | 0.29 | 0.18 | 0.40 | 42 | | | | S | | |
| 1" | (HA) SunDefense IG | PEL-N-277-00389-00001 | 5 | 5 | air | 0.30 | 0.20 | 0.44 | 56 | | | | S | | |
| | with grilles-between-the-glass | PEL-N-277-00390-00001 | | | | 0.30 | 0.18 | 0.40 | 56 | | | | S | | |
| 1" | (HA) SunDefense IG | PEL-N-277-00393-00001 | 6 | 6 | air | 0.30 | 0.20 | 0.44 | 56 | | | | S | | |
| | with grilles-between-the-glass | PEL-N-277-00394-00001 | | | | 0.30 | 0.18 | 0.40 | 56 | | | | S | | |
| 1" | (HA) SunDefense+ IG | PEL-N-277-01697-00001 | 5 | 5 | air | 0.27 | 0.19 | 0.43 | 44 | | | SC | S | | |
| | with grilles-between-the-glass | PEL-N-277-01698-00001 | | | | 0.27 | 0.18 | 0.39 | 44 | | | SC | S | | |
| 1" | (HA) SunDefense+ IG | PEL-N-277-01701-00001 | 6 | 6 | air | 0.27 | 0.19 | 0.43 | 43 | | | SC | S | | |
| | with grilles-between-the-glass | PEL-N-277-01702-00001 | | | | 0.27 | 0.18 | 0.39 | 43 | | | SC | S | | |
| 11/16" | (HA) AdvancedComfort Low-E IG | PEL-N-277-01657-00001 | 3 | 3 | air | 0.27 | 0.26 | 0.48 | 44 | | | | | | |
| | with grilles-between-the-glass | PEL-N-277-00590-00001 | | | | 0.27 | 0.24 | 0.43 | 44 | | | | | | |
| 11/16" | (HA) AdvancedComfort Low-E IG | PEL-N-277-01661-00001 | 4 | 4 | air | 0.28 | 0.26 | 0.47 | 42 | | | | | | |
| | with grilles-between-the-glass | PEL-N-277-01662-00001 | | | | 0.29 | 0.24 | 0.43 | 42 | | | | | | |
| 1" | (HA) AdvancedComfort Low-E IG | PEL-N-277-01689-00001 | 5 | 5 | air | 0.27 | 0.25 | 0.47 | 43 | | | | | | |
| | with grilles-between-the-glass | PEL-N-277-01690-00001 | | | | 0.27 | 0.23 | 0.42 | 43 | | | SC | S | | |
| 1" | (HA) AdvancedComfort Low-E IG | PEL-N-277-01693-00001 | 6 | 6 | air | 0.27 | 0.25 | 0.46 | 43 | | | | | | |
| | with grilles-between-the-glass | PEL-N-277-01694-00001 | | | | 0.27 | 0.23 | 0.42 | 43 | | | SC | S | | |
| 11/16" | (HA) NaturalSun Low-E IG | PEL-N-277-00581-00001 | 3 | 3 | air | 0.32 | 0.48 | 0.55 | 55 | | | | | | |
| | with grilles-between-the-glass | PEL-N-277-00582-00001 | | | | 0.32 | 0.44 | 0.50 | 55 | | | | | | |
| 11/16" | (HA) NaturalSun Low-E IG | PEL-N-277-00585-00001 | 4 | 4 | air | 0.33 | 0.47 | 0.55 | 53 | | | | | | |
| | with grilles-between-the-glass | PEL-N-277-00586-00001 | | | | 0.35 | 0.43 | 0.50 | 53 | | | | | | |
| 11/16" | (HA) NaturalSun+ Low-E IG | PEL-N-277-01649-00001 | 3 | 3 | air | 0.28 | 0.44 | 0.54 | 43 | | | | | | |
| | with grilles-between-the-glass | PEL-N-277-01650-00001 | | | | 0.28 | 0.40 | 0.49 | 43 | | | | | | |
| 11/16" | (HA) NaturalSun+ Low-E IG | PEL-N-277-01653-00001 | 4 | 4 | air | 0.29 | 0.43 | 0.54 | 41 | | | | | | |
| | with grilles-between-the-glass | PEL-N-277-01654-00001 | | | | 0.30 | 0.39 | 0.49 | 41 | | | | | | |
| 1" | (HA) NaturalSun Low-E IG | PEL-N-277-00405-00001 | 5 | 5 | air | 0.31 | 0.47 | 0.54 | 55 | | | | | | |
| | with grilles-between-the-glass | PEL-N-277-00406-00001 | | | | 0.31 | 0.42 | 0.49 | 55 | | | | | | |
| 1" | (HA) NaturalSun Low-E IG | PEL-N-277-00409-00001 | 6 | 6 | air | 0.31 | 0.45 | 0.54 | 55 | | | | | | |
| | with grilles-between-the-glass | PEL-N-277-00410-00001 | | | | 0.31 | 0.41 | 0.49 | 55 | | | | | | |
| 1" | (HA) NaturalSun+ Low-E IG | PEL-N-277-01681-00001 | 5 | 5 | air | 0.27 | 0.42 | 0.53 | 43 | | | | | | |
| | with grilles-between-the-glass | PEL-N-277-01682-00001 | | | | 0.27 | 0.39 | 0.48 | 43 | | | | | | |
| 1" | (HA) NaturalSun+ Low-E IG | PEL-N-277-01685-00001 | 6 | 6 | air | 0.27 | 0.41 | 0.52 | 42 | | | | | | |
| | with grilles-between-the-glass | PEL-N-277-01686-00001 | | | | 0.27 | 0.37 | 0.47 | 42 | | | | | | |

R-Value = 1/U-Factor
SHGC = Solar Heat Gain Coefficient
VLT % = Visible Light Transmission
CR = Condensation Resistance
ER = Canadian Energy Rating

(1) Glazing performance values are calculated based on NFRC 100, NFRC 200 and NFRC 500. ENERGY STAR® values are updated to 2023 (version 7) criteria.

(2) The values shown are based on Canada's updated ENERGY STAR® 2020 initiative. For center-glass values, see the Product Performance section. Visit www.energystar.gov for Energy Star guidelines.

**Climate Zones**

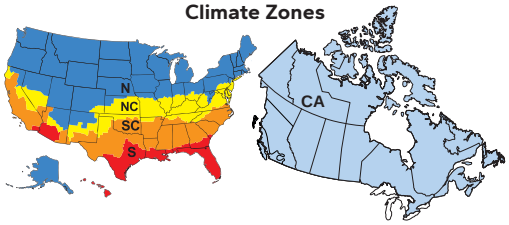

## Glazing Performance – Total Unit

| Glazing Thickness | Type of Glazing | NFRC Certified Product # | Glass (mm) | | Gap Fill | Performance Values[1] | | | | Shaded Areas Meet ENERGY STAR® Performance Criteria in Zones Shown | | | | | |
|---|---|---|---|---|---|---|---|---|---|---|---|---|---|---|---|
| | | | Ext. | Int. | | U-Factor | SHGC | VLT | CR | U. S. Zone | | | | Canada[2] ER | Canada[2] Zone |
| | | | | | | | | | | N | NC | SC | S | | CA |
| **Vent - 5mm/3mm Glass** | | | | | | | | | | | | | | | |
| 1" | Clear IG | PEL-N-277-00009-00001 | 5 | 3 | air | 0.43 | 0.53 | 0.57 | 45 | | | | | | |
| | with grilles-between-the-glass | PEL-N-277-00010-00001 | | | | 0.43 | 0.48 | 0.52 | 45 | | | | | | |
| 1" | Advanced Low-E IG | PEL-N-277-00051-00001 | 5 | 3 | argon | 0.29 | 0.26 | 0.48 | 60 | | | | | | |
| | with grilles-between-the-glass | PEL-N-277-00052-00001 | | | | 0.29 | 0.24 | 0.44 | 60 | | | | | | |
| 1" | SunDefense™ IG | PEL-N-277-00067-00001 | 5 | 3 | argon | 0.28 | 0.20 | 0.45 | 60 | | | SC | S | | |
| | with grilles-between-the-glass | PEL-N-277-00068-00001 | | | | 0.28 | 0.18 | 0.41 | 60 | | | SC | S | | |
| 1" | SunDefense+ IG | PEL-N-277-00891-00001 | 5 | 3 | argon | 0.25 | 0.19 | 0.44 | 48 | | NC | SC | S | | |
| | with grilles-between-the-glass | PEL-N-277-00892-00001 | | | | 0.25 | 0.18 | 0.40 | 48 | | NC | SC | S | | |
| 1" | AdvancedComfort Low-E IG | PEL-N-277-00887-00001 | 5 | 3 | argon | 0.25 | 0.25 | 0.47 | 48 | | NC | | | | |
| | with grilles-between-the-glass | PEL-N-277-00888-00001 | | | | 0.25 | 0.23 | 0.43 | 48 | | NC | SC | S | | |
| 1" | NaturalSun Low-E IG | PEL-N-277-00083-00001 | 5 | 3 | argon | 0.29 | 0.47 | 0.55 | 59 | | | | | | |
| | with grilles-between-the-glass | PEL-N-277-00084-00001 | | | | 0.29 | 0.43 | 0.50 | 59 | | | | | | |
| 1" | NaturalSun+ Low-E IG | PEL-N-277-00883-00001 | 5 | 3 | argon | 0.26 | 0.43 | 0.54 | 47 | N | | | | | |
| | with grilles-between-the-glass | PEL-N-277-00884-00001 | | | | 0.26 | 0.39 | 0.48 | 47 | | | | | | |
| **Vent — 5mm/3mm Glass with Foam Insulation** | | | | | | | | | | | | | | | |
| 1" | Advanced Low-E IG | PEL-N-277-00383-00001 | 5 | 3 | argon | 0.28 | 0.26 | 0.48 | 60 | | | | | | |
| | with grilles-between-the-glass | PEL-N-277-00384-00001 | | | | 0.28 | 0.24 | 0.44 | 60 | | | | | | |
| 1" | SunDefense IG | PEL-N-277-00399-00001 | 5 | 3 | argon | 0.27 | 0.20 | 0.45 | 61 | | | SC | S | | |
| | with grilles-between-the-glass | PEL-N-277-00400-00001 | | | | 0.27 | 0.18 | 0.41 | 61 | | | SC | S | | |
| 1" | SunDefense+ IG | PEL-N-277-01723-00001 | 5 | 3 | argon | 0.25 | 0.19 | 0.44 | 48 | | NC | SC | S | | |
| | with grilles-between-the-glass | PEL-N-277-01724-00001 | | | | 0.25 | 0.18 | 0.40 | 48 | | NC | SC | S | | |
| 1" | AdvancedComfort Low-E IG | PEL-N-277-01719-00001 | 5 | 3 | argon | 0.25 | 0.25 | 0.47 | 48 | | NC | | | | |
| | with grilles-between-the-glass | PEL-N-277-01720-00001 | | | | 0.25 | 0.23 | 0.43 | 48 | | NC | SC | S | | |
| 1" | NaturalSun Low-E IG | PEL-N-277-00415-00001 | 5 | 3 | argon | 0.28 | 0.47 | 0.55 | 60 | | | | | | |
| | with grilles-between-the-glass | PEL-N-277-00416-00001 | | | | 0.28 | 0.43 | 0.50 | 60 | | | | | | |
| 1" | NaturalSun+ Low-E IG | PEL-N-277-01715-00001 | 5 | 3 | argon | 0.26 | 0.43 | 0.54 | 47 | N | | | | | |
| | with grilles-between-the-glass | PEL-N-277-01716-00001 | | | | 0.26 | 0.39 | 0.48 | 47 | | | | | | |
| **Vent - 5mm/3mm Glass High Altitude Glazing** | | | | | | | | | | | | | | | |
| 1" | (HA) Advanced Low-E IG | PEL-N-277-00049-00001 | 5 | 3 | air | 0.32 | 0.26 | 0.48 | 57 | | | | | | |
| | with grilles-between-the-glass | PEL-N-277-00050-00001 | | | | 0.32 | 0.24 | 0.44 | 57 | | | | | | |
| 1" | (HA) SunDefense IG | PEL-N-277-00065-00001 | 5 | 3 | air | 0.31 | 0.20 | 0.45 | 57 | | | | S | | |
| | with grilles-between-the-glass | PEL-N-277-00066-00001 | | | | 0.31 | 0.18 | 0.41 | 57 | | | | S | | |
| 1" | (HA) SunDefense+ IG | PEL-N-277-00889-00001 | 5 | 3 | air | 0.27 | 0.19 | 0.44 | 45 | | | SC | S | | |
| | with grilles-between-the-glass | PEL-N-277-00890-00001 | | | | 0.27 | 0.18 | 0.40 | 45 | | | SC | S | | |
| 1" | (HA) AdvancedComfort Low-E IG | PEL-N-277-00885-00001 | 5 | 3 | air | 0.27 | 0.25 | 0.47 | 44 | | | | | | |
| | with grilles-between-the-glass | PEL-N-277-00886-00001 | | | | 0.27 | 0.23 | 0.43 | 44 | | | SC | S | | |
| 1" | (HA) NaturalSun Low-E IG | PEL-N-277-00081-00001 | 5 | 3 | air | 0.32 | 0.47 | 0.55 | 56 | | | | | | |
| | with grilles-between-the-glass | PEL-N-277-00082-00001 | | | | 0.32 | 0.43 | 0.50 | 56 | | | | | | |
| 1" | (HA) NaturalSun+ Low-E IG | PEL-N-277-00881-00001 | 5 | 3 | air | 0.28 | 0.43 | 0.54 | 44 | | | | | | |
| | with grilles-between-the-glass | PEL-N-277-00882-00001 | | | | 0.28 | 0.39 | 0.48 | 44 | | | | | | |
| **Vent - 5mm/3mm Glass High Altitude Glazing — with Foam Insulation** | | | | | | | | | | | | | | | |
| 1" | (HA) Advanced Low-E IG | PEL-N-277-00381-00001 | 5 | 3 | air | 0.31 | 0.26 | 0.48 | 57 | | | | | | |
| | with grilles-between-the-glass | PEL-N-277-00382-00001 | | | | 0.31 | 0.24 | 0.44 | 57 | | | | | | |
| 1" | (HA) SunDefense IG | PEL-N-277-00397-00001 | 5 | 3 | air | 0.30 | 0.20 | 0.45 | 57 | | | | S | | |
| | with grilles-between-the-glass | PEL-N-277-00398-00001 | | | | 0.30 | 0.18 | 0.41 | 57 | | | | S | | |
| 1" | (HA) SunDefense+ IG | PEL-N-277-01721-00001 | 5 | 3 | air | 0.27 | 0.19 | 0.44 | 45 | | | SC | S | | |
| | with grilles-between-the-glass | PEL-N-277-01722-00001 | | | | 0.27 | 0.18 | 0.40 | 45 | | | SC | S | | |
| 1" | (HA) AdvancedComfort Low-E IG | PEL-N-277-01717-00001 | 5 | 3 | air | 0.27 | 0.25 | 0.47 | 44 | | | | | | |
| | with grilles-between-the-glass | PEL-N-277-01718-00001 | | | | 0.27 | 0.23 | 0.43 | 44 | | | SC | S | | |
| 1" | (HA) NaturalSun Low-E IG | PEL-N-277-00413-00001 | 5 | 3 | air | 0.31 | 0.47 | 0.55 | 56 | | | | | | |
| | with grilles-between-the-glass | PEL-N-277-00414-00001 | | | | 0.31 | 0.43 | 0.50 | 56 | | | | | | |
| 1" | (HA) NaturalSun+ Low-E IG | PEL-N-277-01713-00001 | 5 | 3 | air | 0.28 | 0.43 | 0.54 | 44 | | | | | | |
| | with grilles-between-the-glass | PEL-N-277-01714-00001 | | | | 0.28 | 0.39 | 0.48 | 44 | | | | | | |

(1) Glazing performance values are calculated based on NFRC 100, NFRC 200 and NFRC 500. ENERGY STAR® values are updated to 2023 (version 7) criteria.
(2) The values shown are based on Canada's updated ENERGY STAR® 2020 initiative.
For center-glass values, see the Product Performance section.
Visit www.energystar.gov for Energy Star guidelines.

R-Value = 1/U-Factor
SHGC = Solar Heat Gain Coefficient
VLT % = Visible Light Transmission
CR = Condensation Resistance
ER = Canadian Energy Rating

## Glazing Performance – Total Unit

| Glazing Thickness | Type of Glazing | NFRC Certified Product # | Glass (mm) Ext. | Glass (mm) Int. | Gap Fill | Performance Values[1] U-Factor | SHGC | VLT | CR | Shaded Areas Meet ENERGY STAR® Performance Criteria in Zones Shown U. S. Zone N | NC | SC | S | Canada[2] ER | Canada[2] Zone CA |
|---|---|---|---|---|---|---|---|---|---|---|---|---|---|---|---|
| **Vent - 4mm/6mm Glass** | | | | | | | | | | | | | | | |
| 1" | Clear IG | PEL-N-277-00013-00001 | 4 | 6 | air | 0.43 | 0.53 | 0.56 | 44 | | | | | | |
| | with grilles-between-the-glass | PEL-N-277-00014-00001 | | | | 0.43 | 0.48 | 0.51 | 44 | | | | | | |
| 1" | Advanced Low-E IG | PEL-N-277-00055-00001 | 4 | 6 | argon | 0.28 | 0.26 | 0.48 | 58 | | | | | | |
| | with grilles-between-the-glass | PEL-N-277-00056-00001 | | | | 0.28 | 0.24 | 0.43 | 58 | | | | | | |
| 1" | SunDefense™ IG | PEL-N-277-00071-00001 | 4 | 6 | argon | 0.28 | 0.20 | 0.44 | 59 | | | SC | S | | |
| | with grilles-between-the-glass | PEL-N-277-00072-00001 | | | | 0.28 | 0.18 | 0.40 | 59 | | | SC | S | | |
| 1" | SunDefense+ IG | PENDING | 4 | 6 | argon | | | | | | | | | | |
| | with grilles-between-the-glass | PENDING | | | | | | | | | | | | | |
| 1" | AdvancedComfort Low-E IG | PEL-N-277-00103-00001 | 4 | 6 | argon | 0.25 | 0.25 | 0.47 | 47 | | NC | | | | |
| | with grilles-between-the-glass | PEL-N-277-00104-00001 | | | | 0.25 | 0.23 | 0.42 | 47 | | NC | SC | S | | |
| 1" | NaturalSun Low-E IG | PEL-N-277-00087-00001 | 4 | 6 | argon | 0.29 | 0.47 | 0.54 | 58 | | | | | | |
| | with grilles-between-the-glass | PEL-N-277-00088-00001 | | | | 0.29 | 0.43 | 0.49 | 58 | | | | | | |
| 1" | NaturalSun+ Low-E IG | PENDING | 4 | 6 | argon | | | | | | | | | | |
| | with grilles-between-the-glass | PENDING | | | | | | | | | | | | | |
| **Vent — 4mm/6mm Glass with Foam Insulation** | | | | | | | | | | | | | | | |
| 1" | Advanced Low-E IG | PEL-N-277-00387-00001 | 4 | 6 | argon | 0.27 | 0.26 | 0.48 | 59 | | | | | | |
| | with grilles-between-the-glass | PEL-N-277-00388-00001 | | | | 0.27 | 0.24 | 0.43 | 59 | | | | | | |
| 1" | SunDefense IG | PEL-N-277-00403-00001 | 4 | 6 | argon | 0.27 | 0.20 | 0.44 | 59 | | | SC | S | | |
| | with grilles-between-the-glass | PEL-N-277-00404-00001 | | | | 0.27 | 0.18 | 0.40 | 59 | | | SC | S | | |
| 1" | SunDefense+ IG | PENDING | 4 | 6 | argon | | | | | | | | | | |
| | with grilles-between-the-glass | PENDING | | | | | | | | | | | | | |
| 1" | AdvancedComfort Low-E IG | PEL-N-277-00435-00001 | 4 | 6 | argon | 0.24 | 0.25 | 0.47 | 47 | | NC | | | | |
| | with grilles-between-the-glass | PEL-N-277-00436-00001 | | | | 0.24 | 0.23 | 0.42 | 47 | | NC | SC | S | | |
| 1" | NaturalSun Low-E IG | PEL-N-277-00419-00001 | 4 | 6 | argon | 0.28 | 0.47 | 0.54 | 58 | | | | | | |
| | with grilles-between-the-glass | PEL-N-277-00420-00001 | | | | 0.28 | 0.43 | 0.49 | 58 | | | | | | |
| 1" | NaturalSun+ Low-E IG | PENDING | 4 | 6 | argon | | | | | | | | | | |
| | with grilles-between-the-glass | PENDING | | | | | | | | | | | | | |
| **Vent - 4mm/6mm Glass High Altitude Glazing** | | | | | | | | | | | | | | | |
| 1" | (HA) Advanced Low-E IG | PEL-N-277-00053-00001 | 4 | 6 | air | 0.32 | 0.26 | 0.48 | 55 | | | | | | |
| | with grilles-between-the-glass | PEL-N-277-00054-00001 | | | | 0.32 | 0.24 | 0.43 | 55 | | | | | | |
| 1" | (HA) SunDefense IG | PEL-N-277-00069-00001 | 4 | 6 | air | 0.31 | 0.20 | 0.44 | 55 | | | | S | | |
| | with grilles-between-the-glass | PEL-N-277-00070-00001 | | | | 0.31 | 0.18 | 0.40 | 55 | | | | S | | |
| 1" | (HA) SunDefense+ IG | PENDING | 4 | 6 | air | | | | | | | | | | |
| | with grilles-between-the-glass | PENDING | | | | | | | | | | | | | |
| 1" | (HA) AdvancedComfort Low-E IG | PEL-N-277-00101-00001 | 4 | 6 | air | 0.27 | 0.25 | 0.47 | 44 | | | | | | |
| | with grilles-between-the-glass | PEL-N-277-00102-00001 | | | | 0.27 | 0.23 | 0.42 | 44 | | | SC | S | | |
| 1" | (HA) NaturalSun Low-E IG | PEL-N-277-00085-00001 | 4 | 6 | air | 0.32 | 0.47 | 0.54 | 54 | | | | | | |
| | with grilles-between-the-glass | PEL-N-277-00086-00001 | | | | 0.32 | 0.43 | 0.49 | 54 | | | | | | |
| 1" | (HA) NaturalSun+ Low-E IG | PENDING | 4 | 6 | air | | | | | | | | | | |
| | with grilles-between-the-glass | PENDING | | | | | | | | | | | | | |
| **Vent - 4mm/6mm Glass High Altitude Glazing — with Foam Insulation** | | | | | | | | | | | | | | | |
| 1" | (HA) Advanced Low-E IG | PEL-N-277-00385-00001 | 4 | 6 | air | 0.31 | 0.26 | 0.48 | 55 | | | | | | |
| | with grilles-between-the-glass | PEL-N-277-00386-00001 | | | | 0.31 | 0.24 | 0.43 | 55 | | | | | | |
| 1" | (HA) SunDefense IG | PEL-N-277-00401-00001 | 4 | 6 | air | 0.30 | 0.20 | 0.44 | 56 | | | | S | | |
| | with grilles-between-the-glass | PEL-N-277-00402-00001 | | | | 0.30 | 0.18 | 0.40 | 56 | | | | S | | |
| 1" | (HA) SunDefense+ IG | PENDING | 4 | 6 | air | | | | | | | | | | |
| | with grilles-between-the-glass | PENDING | | | | | | | | | | | | | |
| 1" | (HA) AdvancedComfort Low-E IG | PEL-N-277-00433-00001 | 4 | 6 | air | 0.26 | 0.25 | 0.47 | 44 | | | | | | |
| | with grilles-between-the-glass | PEL-N-277-00434-00001 | | | | 0.26 | 0.23 | 0.42 | 44 | | | SC | S | | |
| 1" | (HA) NaturalSun Low-E IG | PEL-N-277-00417-00001 | 4 | 6 | air | 0.31 | 0.47 | 0.54 | 55 | | | | | | |
| | with grilles-between-the-glass | PEL-N-277-00418-00001 | | | | 0.31 | 0.43 | 0.49 | 55 | | | | | | |
| 1" | (HA) NaturalSun+ Low-E IG | PENDING | 4 | 6 | air | | | | | | | | | | |
| | with grilles-between-the-glass | PENDING | | | | | | | | | | | | | |

(1) Glazing performance values are calculated based on NFRC 100, NFRC 200 and NFRC 500.
ENERGY STAR® values are updated to 2023 (version 7) criteria.
(2) The values shown are based on Canada's updated ENERGY STAR® 2020 initiative.
For center-glass values, see the Product Performance section.
Visit www.energystar.gov for Energy Star guidelines.

R-Value = 1/U-Factor
SHGC = Solar Heat Gain Coefficient
VLT % = Visible Light Transmission
CR = Condensation Resistance
ER = Canadian Energy Rating

## Glazing Performance – Total Unit

| Glazing Thickness | Type of Glazing | NFRC Certified Product # | Glass (mm) Ext. | Glass (mm) Int. | Gap Fill | Performance Values[1] U-Factor | SHGC | VLT | CR | Shaded Areas Meet ENERGY STAR® Performance Criteria in Zones Shown U. S. Zone N | NC | SC | S | Canada[2] ER | Canada[2] Zone CA |
|---|---|---|---|---|---|---|---|---|---|---|---|---|---|---|---|
| **Vent – with Tinted Glazing** | | | | | | | | | | | | | | | |
| 11/16" | Bronze Advanced Low-E IG | PEL-N-277-00275-00001 | 5 | 3 | argon | 0.30 | 0.24 | 0.32 | 59 | | | | | | |
| | with grilles-between-the-glass | PEL-N-277-00276-00001 | | | | 0.31 | 0.22 | 0.29 | 59 | | | | S | | |
| 1" | Bronze Advanced Low-E IG | PEL-N-277-00027-00001 | 5 | 5 | argon | 0.28 | 0.23 | 0.31 | 59 | | | SC | S | | |
| | with grilles-between-the-glass | PEL-N-277-00028-00001 | | | | 0.28 | 0.21 | 0.28 | 59 | | | SC | S | | |
| 1" | Bronze Advanced Low-E IG | PEL-N-277-00039-00001 | 6 | 6 | argon | 0.28 | 0.22 | 0.28 | 58 | | | SC | S | | |
| | with grilles-between-the-glass | PEL-N-277-00040-00001 | | | | 0.28 | 0.20 | 0.25 | 58 | | | SC | S | | |
| 11/16" | Gray Advanced Low-E IG | PEL-N-277-00279-00001 | 5 | 3 | argon | 0.30 | 0.22 | 0.27 | 59 | | | | S | | |
| | with grilles-between-the-glass | PEL-N-277-00280-00001 | | | | 0.31 | 0.20 | 0.25 | 59 | | | | S | | |
| 1" | Gray Advanced Low-E IG | PEL-N-277-00031-00001 | 5 | 5 | argon | 0.28 | 0.21 | 0.27 | 59 | | | SC | S | | |
| | with grilles-between-the-glass | PEL-N-277-00032-00001 | | | | 0.28 | 0.19 | 0.24 | 59 | | | SC | S | | |
| 1" | Gray Advanced Low-E IG | PEL-N-277-00043-00001 | 6 | 6 | argon | 0.28 | 0.19 | 0.24 | 58 | | | SC | S | | |
| | with grilles-between-the-glass | PEL-N-277-00044-00001 | | | | 0.28 | 0.18 | 0.21 | 58 | | | SC | S | | |
| 11/16" | Green Advanced Low-E IG | PEL-N-277-00283-00001 | 5 | 3 | argon | 0.30 | 0.27 | 0.43 | 59 | | | | | | |
| | with grilles-between-the-glass | PEL-N-277-00284-00001 | | | | 0.31 | 0.24 | 0.39 | 59 | | | | | | |
| 1" | Green Advanced Low-E IG | PEL-N-277-00035-00001 | 5 | 5 | argon | 0.28 | 0.26 | 0.42 | 59 | | | | | | |
| | with grilles-between-the-glass | PEL-N-277-00036-00001 | | | | 0.28 | 0.24 | 0.38 | 59 | | | | | | |
| 1" | Green Advanced Low-E IG | PEL-N-277-00047-00001 | 6 | 6 | argon | 0.28 | 0.25 | 0.41 | 58 | | | | | | |
| | with grilles-between-the-glass | PEL-N-277-00048-00001 | | | | 0.28 | 0.23 | 0.37 | 58 | | | SC | S | | |
| **Vent — with Foam Insulation and Tinted Glazing** | | | | | | | | | | | | | | | |
| 11/16" | Bronze Advanced Low-E IG | PEL-N-277-00607-00001 | 5 | 3 | argon | 0.29 | 0.24 | 0.32 | 59 | | | | | | |
| | with grilles-between-the-glass | PEL-N-277-00608-00001 | | | | 0.30 | 0.22 | 0.29 | 59 | | | | S | | |
| 1" | Bronze Advanced Low-E IG | PEL-N-277-00359-00001 | 5 | 5 | argon | 0.27 | 0.23 | 0.31 | 59 | | | SC | S | | |
| | with grilles-between-the-glass | PEL-N-277-00360-00001 | | | | 0.27 | 0.21 | 0.28 | 59 | | | SC | S | | |
| 1" | Bronze Advanced Low-E IG | PEL-N-277-00371-00001 | 6 | 6 | argon | 0.27 | 0.22 | 0.28 | 59 | | | SC | S | | |
| | with grilles-between-the-glass | PEL-N-277-00372-00001 | | | | 0.27 | 0.20 | 0.25 | 59 | | | SC | S | | |
| 11/16" | Gray Advanced Low-E IG | PEL-N-277-00611-00001 | 5 | 3 | argon | 0.29 | 0.22 | 0.27 | 59 | | | | S | | |
| | with grilles-between-the-glass | PEL-N-277-00612-00001 | | | | 0.30 | 0.20 | 0.25 | 59 | | | | S | | |
| 1" | Gray Advanced Low-E IG | PEL-N-277-00363-00001 | 5 | 5 | argon | 0.27 | 0.21 | 0.27 | 59 | | | SC | S | | |
| | with grilles-between-the-glass | PEL-N-277-00364-00001 | | | | 0.27 | 0.19 | 0.24 | 59 | | | SC | S | | |
| 1" | Gray Advanced Low-E IG | PEL-N-277-00375-00001 | 6 | 6 | argon | 0.27 | 0.19 | 0.24 | 59 | | | SC | S | | |
| | with grilles-between-the-glass | PEL-N-277-00376-00001 | | | | 0.27 | 0.18 | 0.21 | 59 | | | SC | S | | |
| 11/16" | Green Advanced Low-E IG | PEL-N-277-00615-00001 | 5 | 3 | argon | 0.29 | 0.27 | 0.43 | 59 | | | | | | |
| | with grilles-between-the-glass | PEL-N-277-00616-00001 | | | | 0.30 | 0.24 | 0.39 | 59 | | | | | | |
| 1" | Green Advanced Low-E IG | PEL-N-277-00367-00001 | 5 | 5 | argon | 0.27 | 0.26 | 0.42 | 59 | | | | | | |
| | with grilles-between-the-glass | PEL-N-277-00368-00001 | | | | 0.27 | 0.24 | 0.38 | 59 | | | | | | |
| 1" | Green Advanced Low-E IG | PEL-N-277-00379-00001 | 6 | 6 | argon | 0.27 | 0.25 | 0.41 | 59 | | | | | | |
| | with grilles-between-the-glass | PEL-N-277-00380-00001 | | | | 0.27 | 0.23 | 0.37 | 59 | | | SC | S | | |

R-Value = 1/U-Factor
SHGC = Solar Heat Gain Coefficient
VLT % = Visible Light Transmission
CR = Condensation Resistance
ER = Canadian Energy Rating

(1) Glazing performance values are calculated based on NFRC 100, NFRC 200 and NFRC 500. ENERGY STAR® values are updated to 2023 (version 7) criteria.

(2) The values shown are based on Canada's updated ENERGY STAR® 2020 initiative. For center-glass values, see the Product Performance section. Visit www.energystar.gov for Energy Star guidelines.

**Climate Zones**

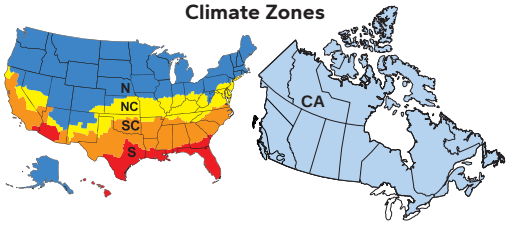

## Glazing Performance – Total Unit

| Glazing Thickness | Type of Glazing | NFRC Certified Product # | Glass (mm) Ext. | Glass (mm) Int. | Gap Fill | Performance Values[1] U-Factor | SHGC | VLT | CR | Shaded Areas Meet ENERGY STAR® Performance Criteria in Zones Shown U. S. Zone N | NC | SC | S | Canada[2] ER | Canada[2] Zone CA |
|---|---|---|---|---|---|---|---|---|---|---|---|---|---|---|---|
| **Vent - High Altitude Glazing – with Tinted Glazing** | | | | | | | | | | | | | | | |
| 11/16" | Bronze Advanced Low-E IG | PEL-N-277-00273-00001 | 5 | 3 | air | 0.34 | 0.24 | 0.32 | 54 | | | | | | |
| | with grilles-between-the-glass | PEL-N-277-00274-00001 | | | | 0.35 | 0.22 | 0.29 | 54 | | | | | | |
| 1" | Bronze Advanced Low-E IG | PEL-N-277-00025-00001 | 5 | 5 | air | 0.32 | 0.24 | 0.31 | 56 | | | | | | |
| | with grilles-between-the-glass | PEL-N-277-00026-00001 | | | | 0.32 | 0.22 | 0.28 | 56 | | | | S | | |
| 1" | Bronze Advanced Low-E IG | PEL-N-277-00037-00001 | 6 | 6 | air | 0.31 | 0.22 | 0.28 | 55 | | | | S | | |
| | with grilles-between-the-glass | PEL-N-277-00038-00001 | | | | 0.31 | 0.20 | 0.25 | 55 | | | | S | | |
| 11/16" | Gray Advanced Low-E IG | PEL-N-277-00277-00001 | 5 | 3 | air | 0.34 | 0.22 | 0.27 | 54 | | | | | | |
| | with grilles-between-the-glass | PEL-N-277-00278-00001 | | | | 0.35 | 0.21 | 0.25 | 54 | | | | | | |
| 1" | Gray Advanced Low-E IG | PEL-N-277-00029-00001 | 5 | 5 | air | 0.32 | 0.22 | 0.27 | 56 | | | | S | | |
| | with grilles-between-the-glass | PEL-N-277-00030-00001 | | | | 0.32 | 0.20 | 0.24 | 56 | | | | S | | |
| 1" | Gray Advanced Low-E IG | PEL-N-277-00041-00001 | 6 | 6 | air | 0.31 | 0.20 | 0.24 | 55 | | | | S | | |
| | with grilles-between-the-glass | PEL-N-277-00042-00001 | | | | 0.31 | 0.18 | 0.21 | 55 | | | | S | | |
| 11/16" | Green Advanced Low-E IG | PEL-N-277-00281-00001 | 5 | 3 | air | 0.34 | 0.27 | 0.43 | 54 | | | | | | |
| | with grilles-between-the-glass | PEL-N-277-00282-00001 | | | | 0.35 | 0.25 | 0.39 | 54 | | | | | | |
| 1" | Green Advanced Low-E IG | PEL-N-277-00033-00001 | 5 | 5 | air | 0.32 | 0.26 | 0.42 | 56 | | | | | | |
| | with grilles-between-the-glass | PEL-N-277-00034-00001 | | | | 0.32 | 0.24 | 0.38 | 56 | | | | | | |
| 1" | Green Advanced Low-E IG | PEL-N-277-00045-00001 | 6 | 6 | air | 0.31 | 0.25 | 0.41 | 55 | | | | | | |
| | with grilles-between-the-glass | PEL-N-277-00046-00001 | | | | 0.31 | 0.23 | 0.37 | 55 | | | | S | | |
| **Vent - High Altitude Glazing — with Foam Insulation and Tinted Glazing** | | | | | | | | | | | | | | | |
| 11/16" | Bronze Advanced Low-E IG | PEL-N-277-00605-00001 | 5 | 3 | air | 0.33 | 0.24 | 0.32 | 54 | | | | | | |
| | with grilles-between-the-glass | PEL-N-277-00606-00001 | | | | 0.34 | 0.22 | 0.29 | 54 | | | | | | |
| 1" | Bronze Advanced Low-E IG | PEL-N-277-00357-00001 | 5 | 5 | air | 0.31 | 0.24 | 0.31 | 56 | | | | | | |
| | with grilles-between-the-glass | PEL-N-277-00358-00001 | | | | 0.31 | 0.22 | 0.28 | 56 | | | | S | | |
| 1" | Bronze Advanced Low-E IG | PEL-N-277-00369-00001 | 6 | 6 | air | 0.30 | 0.22 | 0.28 | 55 | | | | S | | |
| | with grilles-between-the-glass | PEL-N-277-00370-00001 | | | | 0.30 | 0.20 | 0.25 | 55 | | | | S | | |
| 11/16" | Gray Advanced Low-E IG | PEL-N-277-00609-00001 | 5 | 3 | air | 0.33 | 0.22 | 0.27 | 54 | | | | | | |
| | with grilles-between-the-glass | PEL-N-277-00610-00001 | | | | 0.34 | 0.21 | 0.25 | 54 | | | | | | |
| 1" | Gray Advanced Low-E IG | PEL-N-277-00361-00001 | 5 | 5 | air | 0.31 | 0.22 | 0.27 | 56 | | | | S | | |
| | with grilles-between-the-glass | PEL-N-277-00362-00001 | | | | 0.31 | 0.20 | 0.24 | 56 | | | | S | | |
| 1" | Gray Advanced Low-E IG | PEL-N-277-00373-00001 | 6 | 6 | air | 0.30 | 0.20 | 0.24 | 55 | | | | S | | |
| | with grilles-between-the-glass | PEL-N-277-00374-00001 | | | | 0.30 | 0.18 | 0.21 | 55 | | | | S | | |
| 11/16" | Green Advanced Low-E IG | PEL-N-277-00613-00001 | 5 | 3 | air | 0.33 | 0.27 | 0.43 | 54 | | | | | | |
| | with grilles-between-the-glass | PEL-N-277-00614-00001 | | | | 0.34 | 0.25 | 0.39 | 54 | | | | | | |
| 1" | Green Advanced Low-E IG | PEL-N-277-00365-00001 | 5 | 5 | air | 0.31 | 0.26 | 0.42 | 56 | | | | | | |
| | with grilles-between-the-glass | PEL-N-277-00366-00001 | | | | 0.31 | 0.24 | 0.38 | 56 | | | | | | |
| 1" | Green Advanced Low-E IG | PEL-N-277-00377-00001 | 6 | 6 | air | 0.30 | 0.25 | 0.41 | 55 | | | | | | |
| | with grilles-between-the-glass | PEL-N-277-00378-00001 | | | | 0.30 | 0.23 | 0.37 | 55 | | | | S | | |

R-Value = 1/U-Factor
SHGC = Solar Heat Gain Coefficient
VLT % = Visible Light Transmission
CR = Condensation Resistance
ER = Canadian Energy Rating

(1) Glazing performance values are calculated based on NFRC 100, NFRC 200 and NFRC 500. ENERGY STAR® values are updated to 2023 (version 7) criteria.

(2) The values shown are based on Canada's updated ENERGY STAR® 2020 initiative.

For center-glass values, see the Product Performance section.

Visit www.energystar.gov for Energy Star guidelines.

**Climate Zones**

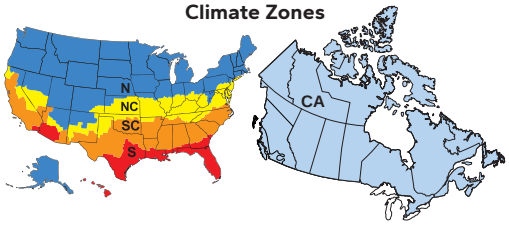

## Glazing Performance – Total Unit

| Glazing Thickness | Type of Glazing | NFRC Certified Product # | Glass (mm) Ext. | Glass (mm) Int. | Gap Fill | Performance Values[1] U-Factor | SHGC | VLT | CR | Shaded Areas Meet ENERGY STAR® Performance Criteria in Zones Shown U. S. Zone N | NC | SC | S | Canada[2] ER | Canada[2] Zone CA |
|---|---|---|---|---|---|---|---|---|---|---|---|---|---|---|---|
| **Vent — with Laminated for Sound Glazing** | | | | | | | | | | | | | | | |
| 1" | Advanced Low-E IG | PEL-N-277-00139-00001 | 4 | 7 | argon | 0.28 | 0.26 | 0.48 | 59 | | | | | | |
| | with grilles-between-the-glass | PEL-N-277-00140-00001 | | | | 0.28 | 0.24 | 0.43 | 59 | | | | | | |
| 1" | Advanced Low-E IG | PEL-N-277-00151-00001 | 5 | 10 | argon | 0.28 | 0.26 | 0.47 | 58 | | | | | | |
| | with grilles-between-the-glass | PEL-N-277-00152-00001 | | | | 0.28 | 0.23 | 0.42 | 58 | | | SC | S | | |
| 1" | SunDefense™ IG | PEL-N-277-00135-00001 | 4 | 7 | argon | 0.28 | 0.20 | 0.44 | 59 | | | SC | S | | |
| | with grilles-between-the-glass | PEL-N-277-00136-00001 | | | | 0.28 | 0.18 | 0.40 | 59 | | | SC | S | | |
| 1" | SunDefense™ IG | PEL-N-277-00147-00001 | 5 | 10 | argon | 0.27 | 0.20 | 0.44 | 58 | | | SC | S | | |
| | with grilles-between-the-glass | PEL-N-277-00148-00001 | | | | 0.27 | 0.18 | 0.39 | 58 | | | SC | S | | |
| **Vent — with Foam insulation and Laminated for Sound Glazing** | | | | | | | | | | | | | | | |
| 1" | Advanced Low-E IG | PEL-N-277-00471-00001 | 4 | 7 | argon | 0.27 | 0.26 | 0.48 | 59 | | | | | | |
| | with grilles-between-the-glass | PEL-N-277-00472-00001 | | | | 0.27 | 0.24 | 0.43 | 59 | | | | | | |
| 1" | Advanced Low-E IG | PEL-N-277-00483-00001 | 5 | 10 | argon | 0.27 | 0.26 | 0.47 | 58 | | | | | | |
| | with grilles-between-the-glass | PEL-N-277-00484-00001 | | | | 0.27 | 0.23 | 0.42 | 58 | | | SC | S | | |
| 1" | SunDefense™ IG | PEL-N-277-00467-00001 | 4 | 7 | argon | 0.27 | 0.20 | 0.44 | 60 | | | SC | S | | |
| | with grilles-between-the-glass | PEL-N-277-00468-00001 | | | | 0.27 | 0.18 | 0.40 | 60 | | | SC | S | | |
| 1" | SunDefense™ IG | PEL-N-277-00479-00001 | 5 | 10 | argon | 0.26 | 0.20 | 0.44 | 58 | | | SC | S | | |
| | with grilles-between-the-glass | PEL-N-277-00480-00001 | | | | 0.26 | 0.18 | 0.39 | 58 | | | SC | S | | |
| **Vent — High Altitude Glazing — with Laminated for Sound Glazing** | | | | | | | | | | | | | | | |
| 1" | Advanced Low-E IG | PEL-N-277-00137-00001 | 4 | 7 | air | 0.31 | 0.26 | 0.48 | 56 | | | | | | |
| | with grilles-between-the-glass | PEL-N-277-00138-00001 | | | | 0.31 | 0.24 | 0.43 | 56 | | | | | | |
| 1" | Advanced Low-E IG | PEL-N-277-00149-00001 | 5 | 10 | air | 0.31 | 0.26 | 0.47 | 54 | | | | | | |
| | with grilles-between-the-glass | PEL-N-277-00150-00001 | | | | 0.31 | 0.24 | 0.42 | 54 | | | | | | |
| 1" | SunDefense™ IG | PEL-N-277-00133-00001 | 4 | 7 | air | 0.31 | 0.20 | 0.44 | 56 | | | | S | | |
| | with grilles-between-the-glass | PEL-N-277-00134-00001 | | | | 0.31 | 0.18 | 0.40 | 56 | | | | S | | |
| 1" | SunDefense™ IG | PEL-N-277-00145-00001 | 5 | 10 | air | 0.31 | 0.20 | 0.44 | 55 | | | | S | | |
| | with grilles-between-the-glass | PEL-N-277-00146-00001 | | | | 0.31 | 0.18 | 0.39 | 55 | | | | S | | |
| **Vent — High Altitude Glazing — with Foam Insulation and Laminated for Sound Glazing** | | | | | | | | | | | | | | | |
| 1" | Advanced Low-E IG | PEL-N-277-00469-00001 | 4 | 7 | air | 0.30 | 0.26 | 0.48 | 56 | | | | | | |
| | with grilles-between-the-glass | PEL-N-277-00470-00001 | | | | 0.30 | 0.24 | 0.43 | 56 | | | | | | |
| 1" | Advanced Low-E IG | PEL-N-277-00481-00001 | 5 | 10 | air | 0.30 | 0.26 | 0.47 | 55 | | | | | | |
| | with grilles-between-the-glass | PEL-N-277-00482-00001 | | | | 0.30 | 0.24 | 0.42 | 55 | | | | | | |
| 1" | SunDefense™ IG | PEL-N-277-00465-00001 | 4 | 7 | air | 0.30 | 0.20 | 0.44 | 56 | | | | S | | |
| | with grilles-between-the-glass | PEL-N-277-00466-00001 | | | | 0.30 | 0.18 | 0.40 | 56 | | | | S | | |
| 1" | SunDefense™ IG | PEL-N-277-00477-00001 | 5 | 10 | air | 0.30 | 0.20 | 0.44 | 55 | | | | S | | |
| | with grilles-between-the-glass | PEL-N-277-00478-00001 | | | | 0.30 | 0.18 | 0.39 | 55 | | | | S | | |

R-Value = 1/U-Factor
SHGC = Solar Heat Gain Coefficient
VLT % = Visible Light Transmission
CR = Condensation Resistance
ER = Canadian Energy Rating

(1) Glazing performance values are calculated based on NFRC 100, NFRC 200 and NFRC 500.
ENERGY STAR® values are updated to 2023 (version 7) criteria.
(2) The values shown are based on Canada's updated ENERGY STAR® 2020 initiative.
For center-glass values, see the Product Performance section.
Visit www.energystar.gov for Energy Star guidelines.

**Climate Zones**

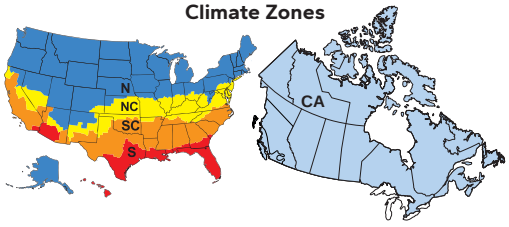

## Glazing Performance – Total Unit

| Glazing Thickness | Type of Glazing | NFRC Certified Product # | Glass (mm) Ext. | Glass (mm) Int. | Gap Fill | Performance Values[1] U-Factor | SHGC | VLT | CR | Shaded Areas Meet ENERGY STAR® Performance Criteria in Zones Shown U. S. Zone N | NC | SC | S | Canada[2] ER | Canada[2] Zone |
|---|---|---|---|---|---|---|---|---|---|---|---|---|---|---|---|
| **Vent — with Impact-Resistant Laminated Glazing** | | | | | | | | | | N | NC | SC | S | | CA |
| 11/16" | Clear IG (PVB) | PEL-N-277-00665-00001 | 3 | 7.6 | air | 0.47 | 0.52 | 0.56 | 41 | | | | | | |
| | with grilles-between-the-glass | PEL-N-277-00666-00001 | | | | 0.48 | 0.47 | 0.51 | 41 | | | | | | |
| 1" | Clear IG (PVB) | PEL-N-277-00913-00001 | 3 | 8.6 | air | 0.43 | 0.52 | 0.56 | 45 | | | | | | |
| | with grilles-between-the-glass | PEL-N-277-00914-00001 | | | | 0.43 | 0.47 | 0.51 | 45 | | | | | | |
| 11/16" | Advanced Low-E IG (PVB) | PEL-N-277-00699-00001 | 3 | 7.6 | argon | 0.33 | 0.26 | 0.47 | 54 | | | | | | |
| | with grilles-between-the-glass | PEL-N-277-00700-00001 | | | | 0.35 | 0.24 | 0.43 | 54 | | | | | | |
| 1" | Advanced Low-E IG (PVB) | PEL-N-277-00963-00001 | 3 | 8.6 | argon | 0.28 | 0.26 | 0.47 | 59 | | | | | | |
| | with grilles-between-the-glass | PEL-N-277-00964-00001 | | | | 0.28 | 0.24 | 0.43 | 59 | | | | | | |
| 11/16" | SunDefense™ IG (PVB) | PEL-N-277-00683-00001 | 3 | 7.6 | argon | 0.33 | 0.20 | 0.44 | 54 | | | | | | |
| | with grilles-between-the-glass | PEL-N-277-00684-00001 | | | | 0.35 | 0.18 | 0.40 | 54 | | | | | | |
| 1" | SunDefense™ IG (PVB) | PEL-N-277-00939-00001 | 3 | 8.6 | argon | 0.28 | 0.19 | 0.44 | 59 | | | SC | S | | |
| | with grilles-between-the-glass | PEL-N-277-00940-00001 | | | | 0.28 | 0.18 | 0.40 | 59 | | | SC | S | | |
| 11/16" | Bronze Advanced Low-E IG (PVB) | PEL-N-277-00703-00001 | 3 | 7.6 | argon | 0.33 | 0.25 | 0.35 | 54 | | | | | | |
| | with grilles-between-the-glass | PEL-N-277-00704-00001 | | | | 0.35 | 0.23 | 0.31 | 54 | | | | | | |
| 1" | Bronze Advanced Low-E IG (PVB) | PEL-N-277-00975-00001 | 3 | 8.6 | argon | 0.28 | 0.25 | 0.35 | 60 | | | | | | |
| | with grilles-between-the-glass | PEL-N-277-00976-00001 | | | | 0.28 | 0.23 | 0.31 | 60 | | | SC | S | | |
| **Vent — with Foam Insulation and Impact-Resistant Laminated Glazing** | | | | | | | | | | | | | | | |
| 11/16" | Advanced Low-E IG (PVB) | PEL-N-277-01531-00001 | 3 | 7.6 | argon | 0.33 | 0.26 | 0.47 | 54 | | | | | | |
| | with grilles-between-the-glass | PEL-N-277-01532-00001 | | | | 0.35 | 0.24 | 0.43 | 54 | | | | | | |
| 1" | Advanced Low-E IG (PVB) | PEL-N-277-01795-00001 | 3 | 8.6 | argon | 0.28 | 0.26 | 0.47 | 59 | | | | | | |
| | with grilles-between-the-glass | PEL-N-277-01796-00001 | | | | 0.28 | 0.24 | 0.43 | 59 | | | | | | |
| 11/16" | SunDefense™ IG (PVB) | PEL-N-277-01515-00001 | 3 | 7.6 | argon | 0.33 | 0.20 | 0.44 | 54 | | | | | | |
| | with grilles-between-the-glass | PEL-N-277-01516-00001 | | | | 0.35 | 0.18 | 0.40 | 54 | | | | | | |
| 1" | SunDefense™ IG (PVB) | PEL-N-277-01771-00001 | 3 | 8.6 | argon | 0.27 | 0.19 | 0.44 | 60 | | | SC | S | | |
| | with grilles-between-the-glass | PEL-N-277-01772-00001 | | | | 0.27 | 0.18 | 0.40 | 60 | | | SC | S | | |
| 11/16" | Bronze Advanced Low-E IG (PVB) | PEL-N-277-01535-00001 | 3 | 7.6 | argon | 0.33 | 0.25 | 0.35 | 54 | | | | | | |
| | with grilles-between-the-glass | PEL-N-277-01536-00001 | | | | 0.35 | 0.23 | 0.31 | 54 | | | | | | |
| 1" | Bronze Advanced Low-E IG (PVB) | PEL-N-277-01807-00001 | 3 | 8.6 | argon | 0.28 | 0.25 | 0.35 | 60 | | | | | | |
| | with grilles-between-the-glass | PEL-N-277-01808-00001 | | | | 0.28 | 0.23 | 0.31 | 60 | | | SC | S | | |
| **Vent — High Altitude with Impact-Resistant Laminated Glazing** | | | | | | | | | | | | | | | |
| 11/16" | Advanced Low-E IG (PVB) | PEL-N-277-00697-00001 | 3 | 7.6 | air | 0.38 | 0.26 | 0.47 | 49 | | | | | | |
| | with grilles-between-the-glass | PEL-N-277-00698-00001 | | | | 0.40 | 0.24 | 0.43 | 49 | | | | | | |
| 1" | Advanced Low-E IG (PVB) | PEL-N-277-00961-00001 | 3 | 8.6 | air | 0.31 | 0.26 | 0.47 | 56 | | | | | | |
| | with grilles-between-the-glass | PEL-N-277-00962-00001 | | | | 0.31 | 0.24 | 0.43 | 56 | | | | | | |
| 11/16" | SunDefense™ IG (PVB) | PEL-N-277-00681-00001 | 3 | 7.6 | air | 0.38 | 0.20 | 0.44 | 49 | | | | | | |
| | with grilles-between-the-glass | PEL-N-277-00682-00001 | | | | 0.40 | 0.19 | 0.40 | 49 | | | | | | |
| 1" | SunDefense™ IG (PVB) | PEL-N-277-00937-00001 | 3 | 8.6 | air | 0.31 | 0.20 | 0.44 | 56 | | | | S | | |
| | with grilles-between-the-glass | PEL-N-277-00938-00001 | | | | 0.31 | 0.18 | 0.40 | 56 | | | | S | | |
| 11/16" | Bronze Advanced Low-E IG (PVB) | PEL-N-277-00701-00001 | 3 | 7.6 | air | 0.38 | 0.25 | 0.35 | 50 | | | | | | |
| | with grilles-between-the-glass | PEL-N-277-00702-00001 | | | | 0.40 | 0.23 | 0.31 | 50 | | | | | | |
| 1" | Bronze Advanced Low-E IG (PVB) | PEL-N-277-00973-00001 | 3 | 8.6 | air | 0.31 | 0.25 | 0.35 | 56 | | | | | | |
| | with grilles-between-the-glass | PEL-N-277-00974-00001 | | | | 0.31 | 0.23 | 0.31 | 56 | | | | S | | |
| **Vent — High Altitude with Foam Insulation and Impact-Resistant Laminated Glazing** | | | | | | | | | | | | | | | |
| 11/16" | Advanced Low-E IG (PVB) | PEL-N-277-01529-00001 | 3 | 7.6 | air | 0.37 | 0.26 | 0.47 | 49 | | | | | | |
| | with grilles-between-the-glass | PEL-N-277-01530-00001 | | | | 0.40 | 0.24 | 0.43 | 49 | | | | | | |
| 1" | Advanced Low-E IG (PVB) | PEL-N-277-01793-00001 | 3 | 8.6 | air | 0.31 | 0.26 | 0.47 | 56 | | | | | | |
| | with grilles-between-the-glass | PEL-N-277-01794-00001 | | | | 0.31 | 0.24 | 0.43 | 56 | | | | | | |
| 11/16" | SunDefense™ IG (PVB) | PEL-N-277-01513-00001 | 3 | 7.6 | air | 0.37 | 0.20 | 0.44 | 49 | | | | | | |
| | with grilles-between-the-glass | PEL-N-277-01514-00001 | | | | 0.39 | 0.19 | 0.40 | 49 | | | | | | |
| 1" | SunDefense™ IG (PVB) | PEL-N-277-01769-00001 | 3 | 8.6 | air | 0.30 | 0.20 | 0.44 | 56 | | | | S | | |
| | with grilles-between-the-glass | PEL-N-277-01770-00001 | | | | 0.30 | 0.18 | 0.40 | 56 | | | | S | | |
| 11/16" | Bronze Advanced Low-E IG (PVB) | PEL-N-277-01533-00001 | 3 | 7.6 | air | 0.37 | 0.25 | 0.35 | 50 | | | | | | |
| | with grilles-between-the-glass | PEL-N-277-01534-00001 | | | | 0.39 | 0.23 | 0.31 | 50 | | | | | | |
| 1" | Bronze Advanced Low-E IG (PVB) | PEL-N-277-01805-00001 | 3 | 8.6 | air | 0.31 | 0.25 | 0.35 | 56 | | | | | | |
| | with grilles-between-the-glass | PEL-N-277-01806-00001 | | | | 0.31 | 0.23 | 0.31 | 56 | | | | S | | |

(1) Glazing performance values are calculated based on NFRC 100, NFRC 200 and NFRC 500.
ENERGY STAR® values are updated to 2023 (version 7) criteria.
(2) The values shown are based on Canada's updated ENERGY STAR® 2020 initiative.
For center-glass values, see the Product Performance section.
Visit www.energystar.gov for Energy Star guidelines.

R-Value = 1/U-Factor
SHGC = Solar Heat Gain Coefficient
VLT % = Visible Light Transmission
CR = Condensation Resistance
ER = Canadian Energy Rating

## Glazing Performance – Total Unit

| Glazing Thickness | Type of Glazing | NFRC Certified Product # | Glass (mm) | | | Gap Fill | Performance Values[1] | | | | Shaded Areas Meet ENERGY STAR® Performance Criteria in Zones Shown | | | | | |
|---|---|---|---|---|---|---|---|---|---|---|---|---|---|---|---|---|
| | | | Ext. | Middle | Int. | | U-Factor | SHGC | VLT | CR | U. S. Zone | | | | Canada[2] ER | Canada[2] Zone |
| | | | | | | | | | | | N | NC | SC | S | | CA |
| **Vent — Triple Pane** | | | | | | | | | | | | | | | | |
| 1" | Advanced Low-E IG | PEL-N-277-00167-00001 | 3 | 3 | 3 | argon | 0.23 | 0.24 | 0.43 | 67 | | NC | | | | |
| | with grilles-between-the-glass | PEL-N-277-00168-00001 | | | | | 0.24 | 0.22 | 0.39 | 67 | | NC | SC | S | | |
| 1" | SunDefense™ IG | PEL-N-277-00179-00001 | 3 | 3 | 3 | argon | 0.23 | 0.18 | 0.40 | 67 | | NC | SC | S | | |
| | with grilles-between-the-glass | PEL-N-277-00180-00001 | | | | | 0.23 | 0.17 | 0.36 | 67 | | NC | SC | S | | |
| 1" | NaturalSun Low-E IG | PEL-N-277-00155-00001 | 3 | 3 | 3 | argon | 0.23 | 0.40 | 0.49 | 66 | N | NC | | | | |
| | with grilles-between-the-glass | PEL-N-277-00156-00001 | | | | | 0.24 | 0.36 | 0.44 | 66 | N | NC | | | | |
| **Vent — Triple Pane with Foam Insulation** | | | | | | | | | | | | | | | | |
| 1" | Advanced Low-E IG | PEL-N-277-00499-00001 | 3 | 3 | 3 | argon | 0.22 | 0.24 | 0.43 | 67 | N | NC | | | | |
| | with grilles-between-the-glass | PEL-N-277-00500-00001 | | | | | 0.23 | 0.22 | 0.39 | 67 | | NC | SC | S | | |
| 1" | SunDefense IG | PEL-N-277-00511-00001 | 3 | 3 | 3 | argon | 0.22 | 0.18 | 0.40 | 67 | N | NC | SC | S | | |
| | with grilles-between-the-glass | PEL-N-277-00512-00001 | | | | | 0.22 | 0.17 | 0.36 | 67 | N | NC | SC | S | | |
| 1" | NaturalSun Low-E IG | PEL-N-277-00487-00001 | 3 | 3 | 3 | argon | 0.22 | 0.40 | 0.49 | 67 | N | NC | | | 35 | CA |
| | with grilles-between-the-glass | PEL-N-277-00488-00001 | | | | | 0.23 | 0.36 | 0.44 | 67 | N | NC | | | | |
| **Vent — Triple Pane with High Altitude Glazing** | | | | | | | | | | | | | | | | |
| 1" | (HA) Advanced Low-E IG | PEL-N-277-00165-00001 | 3 | 3 | 3 | air | 0.26 | 0.24 | 0.43 | 63 | | | | | | |
| | with grilles-between-the-glass | PEL-N-277-00166-00001 | | | | | 0.27 | 0.22 | 0.39 | 63 | | | SC | S | | |
| 1" | (HA) SunDefense IG | PEL-N-277-00177-00001 | 3 | 3 | 3 | air | 0.26 | 0.18 | 0.40 | 63 | | | SC | S | | |
| | with grilles-between-the-glass | PEL-N-277-00178-00001 | | | | | 0.27 | 0.17 | 0.36 | 63 | | | SC | S | | |
| 1" | (HA) NaturalSun Low-E IG | PEL-N-277-00153-00001 | 3 | 3 | 3 | air | 0.27 | 0.40 | 0.49 | 63 | | | | | | |
| | with grilles-between-the-glass | PEL-N-277-00154-00001 | | | | | 0.27 | 0.36 | 0.44 | 63 | | | | | | |
| **Vent — Triple Pane with High Altitude Glazing and Foam Insulation** | | | | | | | | | | | | | | | | |
| 1" | (HA) Advanced Low-E IG | PEL-N-277-00497-00001 | 3 | 3 | 3 | air | 0.25 | 0.24 | 0.43 | 63 | | NC | | | | |
| | with grilles-between-the-glass | PEL-N-277-00498-00001 | | | | | 0.26 | 0.22 | 0.39 | 63 | | | SC | S | | |
| 1" | (HA) SunDefense IG | PEL-N-277-00509-00001 | 3 | 3 | 3 | air | 0.25 | 0.18 | 0.40 | 63 | | NC | SC | S | | |
| | with grilles-between-the-glass | PEL-N-277-00510-00001 | | | | | 0.26 | 0.17 | 0.36 | 63 | | | SC | S | | |
| 1" | (HA) NaturalSun Low-E IG | PEL-N-277-00485-00001 | 3 | 3 | 3 | air | 0.26 | 0.40 | 0.49 | 63 | N | | | | | |
| | with grilles-between-the-glass | PEL-N-277-00486-00001 | | | | | 0.26 | 0.36 | 0.44 | 63 | | | | | | |

R-Value = 1/U-Factor
SHGC = Solar Heat Gain Coefficient
VLT % = Visible Light Transmission
CR = Condensation Resistance
ER = Canadian Energy Rating

(1) Glazing performance values are calculated based on NFRC 100, NFRC 200 and NFRC 500. ENERGY STAR® values are updated to 2023 (version 7) criteria.

(2) The values shown are based on Canada's updated ENERGY STAR® 2020 initiative. For center-glass values, see the Product Performance section. Visit www.energystar.gov for Energy Star guidelines.

**Climate Zones**

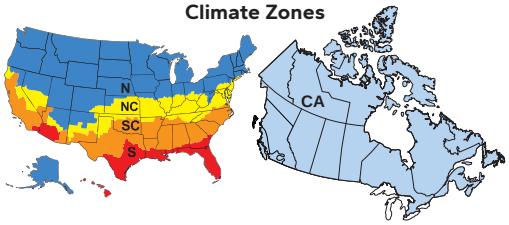

## Glazing Performance – Total Unit

| Glazing Thickness | Type of Glazing | NFRC Certified Product # | Glass (mm) Ext. | Glass (mm) Int. | Gap Fill | Performance Values[1] U-Factor | SHGC | VLT | CR | Shaded Areas Meet ENERGY STAR® Performance Criteria in Zones Shown U. S. Zone N | NC | SC | S | Canada[2] ER | Zone |
|---|---|---|---|---|---|---|---|---|---|---|---|---|---|---|---|
| **Fixed** | | | | | | | | | | | | | | | CA |
| 11/16" | Clear IG | PEL-N-276-00225-00001 | 3 | 3 | air | 0.46 | 0.63 | 0.66 | 44 | | | | | | |
| | with grilles-between-the-glass | PEL-N-276-00226-00001 | | | | 0.46 | 0.56 | 0.59 | 44 | | | | | | |
| 11/16" | Clear IG | PEL-N-276-00229-00001 | 4 | 4 | air | 0.47 | 0.61 | 0.66 | 43 | | | | | | |
| | with grilles-between-the-glass | PEL-N-276-00230-00001 | | | | 0.48 | 0.55 | 0.59 | 43 | | | | | | |
| 1" | Clear IG | PEL-N-276-00001-00001 | 5 | 5 | air | 0.45 | 0.60 | 0.65 | 44 | | | | | | |
| | with grilles-between-the-glass | PEL-N-276-00002-00001 | | | | 0.45 | 0.54 | 0.58 | 44 | | | | | | |
| 1" | Clear IG | PEL-N-276-00005-00001 | 6 | 6 | air | 0.44 | 0.58 | 0.64 | 44 | | | | | | |
| | with grilles-between-the-glass | PEL-N-276-00006-00001 | | | | 0.44 | 0.52 | 0.57 | 44 | | | | | | |
| 11/16" | Advanced Low-E IG | PEL-N-276-00235-00001 | 3 | 3 | argon | 0.27 | 0.30 | 0.56 | 59 | | | | | | |
| | with grilles-between-the-glass | PEL-N-276-00236-00001 | | | | 0.28 | 0.27 | 0.50 | 59 | | | | | | |
| 11/16" | Advanced Low-E IG | PEL-N-276-00239-00001 | 4 | 4 | argon | 0.28 | 0.30 | 0.56 | 57 | | | | | | |
| | with grilles-between-the-glass | PEL-N-276-00240-00001 | | | | 0.30 | 0.27 | 0.50 | 57 | | | | | | |
| 1" | Advanced Low-E IG | PEL-N-276-00019-00001 | 5 | 5 | argon | 0.27 | 0.29 | 0.55 | 59 | | | | | | |
| | with grilles-between-the-glass | PEL-N-276-00020-00001 | | | | 0.27 | 0.26 | 0.49 | 59 | | | | | | |
| 1" | Advanced Low-E IG | PEL-N-276-00023-00001 | 6 | 6 | argon | 0.27 | 0.29 | 0.54 | 58 | | | | | | |
| | with grilles-between-the-glass | PEL-N-276-00024-00001 | | | | 0.27 | 0.26 | 0.48 | 58 | | | | | | |
| 11/16" | SunDefense™ IG | PEL-N-276-00243-00001 | 3 | 3 | argon | 0.27 | 0.22 | 0.52 | 60 | | | SC | S | | |
| | with grilles-between-the-glass | PEL-N-276-00244-00001 | | | | 0.28 | 0.20 | 0.46 | 60 | | | SC | S | | |
| 11/16" | SunDefense™ IG | PEL-N-276-00247-00001 | 4 | 4 | argon | 0.28 | 0.23 | 0.52 | 58 | | | SC | S | | |
| | with grilles-between-the-glass | PEL-N-276-00248-00001 | | | | 0.29 | 0.21 | 0.46 | 58 | | | | S | | |
| 11/16" | SunDefense+ IG | PEL-N-276-00299-00001 | 3 | 3 | argon | 0.23 | 0.22 | 0.51 | 47 | | NC | SC | S | | |
| | with grilles-between-the-glass | PEL-N-276-00300-00001 | | | | 0.24 | 0.20 | 0.45 | 47 | | NC | SC | S | | |
| 11/16" | SunDefense+ IG | PEL-N-276-00303-00001 | 4 | 4 | argon | 0.24 | 0.22 | 0.50 | 45 | | NC | SC | S | | |
| | with grilles-between-the-glass | PEL-N-276-00304-00001 | | | | 0.25 | 0.20 | 0.45 | 45 | | NC | SC | S | | |
| 1" | SunDefense™ IG | PEL-N-276-00059-00001 | 5 | 5 | argon | 0.27 | 0.22 | 0.51 | 59 | | | SC | S | | |
| | with grilles-between-the-glass | PEL-N-276-00060-00001 | | | | 0.27 | 0.20 | 0.46 | 59 | | | SC | S | | |
| 1" | SunDefense™ IG | PEL-N-276-00063-00001 | 6 | 6 | argon | 0.27 | 0.22 | 0.50 | 58 | | | SC | S | | |
| | with grilles-between-the-glass | PEL-N-276-00064-00001 | | | | 0.27 | 0.20 | 0.45 | 58 | | | SC | S | | |
| 1" | SunDefense+ IG | PEL-N-276-00867-00001 | 5 | 5 | argon | 0.23 | 0.22 | 0.50 | 47 | | NC | SC | S | | |
| | with grilles-between-the-glass | PEL-N-276-00868-00001 | | | | 0.23 | 0.20 | 0.45 | 47 | | NC | SC | S | | |
| 1" | SunDefense+ IG | PEL-N-276-00871-00001 | 6 | 6 | argon | 0.23 | 0.22 | 0.49 | 46 | | NC | SC | S | | |
| | with grilles-between-the-glass | PEL-N-276-00872-00001 | | | | 0.23 | 0.20 | 0.44 | 46 | | NC | SC | S | | |
| 11/16" | AdvancedComfort Low-E IG | PEL-N-276-00259-00001 | 3 | 3 | argon | 0.23 | 0.29 | 0.55 | 47 | | NC | | | | |
| | with grilles-between-the-glass | PEL-N-276-00260-00001 | | | | 0.24 | 0.27 | 0.49 | 47 | | NC | | | | |
| 11/16" | AdvancedComfort Low-E IG | PEL-N-276-00263-00001 | 4 | 4 | argon | 0.24 | 0.29 | 0.54 | 45 | | NC | | | | |
| | with grilles-between-the-glass | PEL-N-276-00264-00001 | | | | 0.26 | 0.26 | 0.48 | 45 | | | | | | |
| 1" | AdvancedComfort Low-E IG | PEL-N-276-00859-00001 | 5 | 5 | argon | 0.23 | 0.29 | 0.54 | 46 | | NC | | | | |
| | with grilles-between-the-glass | PEL-N-276-00860-00001 | | | | 0.23 | 0.26 | 0.48 | 46 | | NC | | | | |
| 1" | AdvancedComfort Low-E IG | PEL-N-276-00863-00001 | 6 | 6 | argon | 0.23 | 0.28 | 0.53 | 46 | | NC | | | | |
| | with grilles-between-the-glass | PEL-N-276-00864-00001 | | | | 0.23 | 0.26 | 0.47 | 46 | | NC | | | | |
| 11/16" | NaturalSun Low-E IG | PEL-N-276-00251-00001 | 3 | 3 | argon | 0.28 | 0.55 | 0.64 | 59 | | | | | 37 | CA |
| | with grilles-between-the-glass | PEL-N-276-00252-00001 | | | | 0.29 | 0.50 | 0.57 | 59 | | | | | | |
| 11/16" | NaturalSun Low-E IG | PEL-N-276-00255-00001 | 4 | 4 | argon | 0.29 | 0.54 | 0.63 | 57 | | | | | 35 | CA |
| | with grilles-between-the-glass | PEL-N-276-00256-00001 | | | | 0.31 | 0.48 | 0.56 | 57 | | | | | | |
| 11/16" | NaturalSun+ Low-E IG | PEL-N-276-00819-00001 | 3 | 3 | argon | 0.24 | 0.50 | 0.62 | 46 | N | | | | 39 | CA |
| | with grilles-between-the-glass | PEL-N-276-00820-00001 | | | | 0.24 | 0.45 | 0.56 | 46 | N | | | | 36 | CA |
| 11/16" | NaturalSun+ Low-E IG | PEL-N-276-00823-00001 | 4 | 4 | argon | 0.25 | 0.49 | 0.62 | 44 | N | | | | 37 | CA |
| | with grilles-between-the-glass | PEL-N-276-00824-00001 | | | | 0.26 | 0.44 | 0.55 | 44 | N | | | | | |
| 1" | NaturalSun Low-E IG | PEL-N-276-00075-00001 | 5 | 5 | argon | 0.28 | 0.53 | 0.63 | 58 | | | | | 36 | CA |
| | with grilles-between-the-glass | PEL-N-276-00076-00001 | | | | 0.28 | 0.48 | 0.56 | 58 | | | | | | |
| 1" | NaturalSun Low-E IG | PEL-N-276-00079-00001 | 6 | 6 | argon | 0.28 | 0.52 | 0.62 | 57 | | | | | 35 | CA |
| | with grilles-between-the-glass | PEL-N-276-00080-00001 | | | | 0.28 | 0.47 | 0.55 | 57 | | | | | | |
| 1" | NaturalSun+ Low-E IG | PEL-N-276-00851-00001 | 5 | 5 | argon | 0.24 | 0.49 | 0.61 | 46 | N | | | | 38 | CA |
| | with grilles-between-the-glass | PEL-N-276-00852-00001 | | | | 0.24 | 0.44 | 0.55 | 46 | N | | | | 35 | CA |
| 1" | NaturalSun+ Low-E IG | PEL-N-276-00855-00001 | 6 | 6 | argon | 0.24 | 0.47 | 0.60 | 45 | N | | | | 37 | CA |
| | with grilles-between-the-glass | PEL-N-276-00856-00001 | | | | 0.24 | 0.42 | 0.54 | 45 | N | | | | 34 | CA |

(1) Glazing performance values are calculated based on NFRC 100, NFRC 200 and NFRC 500. ENERGY STAR® values are updated to 2023 (version 7) criteria.
(2) The values shown are based on Canada's updated ENERGY STAR® 2020 initiative.
For center-glass values, see the Product Performance section.
Visit www.energystar.gov for Energy Star guidelines.

R-Value = 1/U-Factor
SHGC = Solar Heat Gain Coefficient
VLT % = Visible Light Transmission
CR = Condensation Resistance
ER = Canadian Energy Rating

## Glazing Performance – Total Unit

| Glazing Thickness | Type of Glazing | NFRC Certified Product # | Glass (mm) Ext. | Glass (mm) Int. | Gap Fill | Performance Values[1] U-Factor | SHGC | VLT | CR | Shaded Areas Meet ENERGY STAR® Performance Criteria in Zones Shown U. S. Zone N | NC | SC | S | Canada[2] ER | Zone |
|---|---|---|---|---|---|---|---|---|---|---|---|---|---|---|---|
| **Fixed — with Foam Insulation** | | | | | | | | | | | | | | | CA |
| 11/16" | Advanced Low-E IG | PEL-N-276-00567-00001 | 3 | 3 | argon | 0.26 | 0.30 | 0.56 | 59 | | | | | | |
| | with grilles-between-the-glass | PEL-N-276-00568-00001 | | | | 0.27 | 0.27 | 0.50 | 59 | | | | | | |
| 11/16" | Advanced Low-E IG | PEL-N-276-00571-00001 | 4 | 4 | argon | 0.28 | 0.30 | 0.56 | 57 | | | | | | |
| | with grilles-between-the-glass | PEL-N-276-00572-00001 | | | | 0.29 | 0.27 | 0.50 | 57 | | | | | | |
| 1" | Advanced Low-E IG | PEL-N-276-00351-00001 | 5 | 5 | argon | 0.27 | 0.29 | 0.55 | 59 | | | | | | |
| | with grilles-between-the-glass | PEL-N-276-00352-00001 | | | | 0.27 | 0.26 | 0.49 | 59 | | | | | | |
| 1" | Advanced Low-E IG | PEL-N-276-00355-00001 | 6 | 6 | argon | 0.27 | 0.29 | 0.54 | 58 | | | | | | |
| | with grilles-between-the-glass | PEL-N-276-00356-00001 | | | | 0.27 | 0.26 | 0.48 | 58 | | | | | | |
| 11/16" | SunDefense IG | PEL-N-276-00575-00001 | 3 | 3 | argon | 0.26 | 0.22 | 0.52 | 60 | | | SC | S | | |
| | with grilles-between-the-glass | PEL-N-276-00576-00001 | | | | 0.27 | 0.20 | 0.46 | 60 | | | SC | S | | |
| 11/16" | SunDefense IG | PEL-N-276-00579-00001 | 4 | 4 | argon | 0.27 | 0.23 | 0.52 | 58 | | | SC | S | | |
| | with grilles-between-the-glass | PEL-N-276-00580-00001 | | | | 0.29 | 0.21 | 0.46 | 58 | | | | S | | |
| 11/16" | SunDefense+ IG | PEL-N-276-01667-00001 | 3 | 3 | argon | 0.23 | 0.22 | 0.51 | 47 | | NC | SC | S | | |
| | with grilles-between-the-glass | PEL-N-276-00632-00001 | | | | 0.23 | 0.20 | 0.45 | 47 | | NC | SC | S | | |
| 11/16" | SunDefense+ IG | PEL-N-276-01671-00001 | 4 | 4 | argon | 0.23 | 0.22 | 0.50 | 46 | | NC | SC | S | | |
| | with grilles-between-the-glass | PEL-N-276-00636-00001 | | | | 0.25 | 0.20 | 0.45 | 45 | | NC | SC | S | | |
| 1" | SunDefense IG | PEL-N-276-00391-00001 | 5 | 5 | argon | 0.26 | 0.22 | 0.51 | 59 | | | SC | S | | |
| | with grilles-between-the-glass | PEL-N-276-00392-00001 | | | | 0.26 | 0.20 | 0.46 | 59 | | | SC | S | | |
| 1" | SunDefense IG | PEL-N-276-00395-00001 | 6 | 6 | argon | 0.26 | 0.22 | 0.50 | 58 | | | SC | S | | |
| | with grilles-between-the-glass | PEL-N-276-00396-00001 | | | | 0.26 | 0.20 | 0.45 | 58 | | | SC | S | | |
| 1" | SunDefense+ IG | PEL-N-276-01699-00001 | 5 | 5 | argon | 0.23 | 0.22 | 0.50 | 47 | | NC | SC | S | | |
| | with grilles-between-the-glass | PEL-N-276-01700-00001 | | | | 0.23 | 0.20 | 0.45 | 47 | | NC | SC | S | | |
| 1" | SunDefense+ IG | PEL-N-276-01703-00001 | 6 | 6 | argon | 0.22 | 0.22 | 0.49 | 46 | N | NC | SC | S | | |
| | with grilles-between-the-glass | PEL-N-276-01704-00001 | | | | 0.22 | 0.20 | 0.44 | 46 | N | NC | SC | S | | |
| 11/16" | AdvancedComfort Low-E IG | PEL-N-276-00591-00001 | 3 | 3 | argon | 0.23 | 0.29 | 0.55 | 47 | | NC | | | | |
| | with grilles-between-the-glass | PEL-N-276-00592-00001 | | | | 0.23 | 0.27 | 0.49 | 47 | | NC | | | | |
| 11/16" | AdvancedComfort Low-E IG | PEL-N-276-01663-00001 | 4 | 4 | argon | 0.24 | 0.29 | 0.54 | 45 | | NC | | | | |
| | with grilles-between-the-glass | PEL-N-276-00596-00001 | | | | 0.23 | 0.26 | 0.48 | 46 | | NC | | | | |
| 1" | AdvancedComfort Low-E IG | PEL-N-276-01691-00001 | 5 | 5 | argon | 0.23 | 0.29 | 0.54 | 46 | | NC | | | | |
| | with grilles-between-the-glass | PEL-N-276-01692-00001 | | | | 0.23 | 0.26 | 0.48 | 46 | | NC | | | | |
| 1" | AdvancedComfort Low-E IG | PEL-N-276-01695-00001 | 6 | 6 | argon | 0.23 | 0.28 | 0.53 | 46 | | NC | | | | |
| | with grilles-between-the-glass | PEL-N-276-01696-00001 | | | | 0.23 | 0.26 | 0.47 | 46 | | NC | | | | |
| 11/16" | NaturalSun Low-E IG | PEL-N-276-00583-00001 | 3 | 3 | argon | 0.27 | 0.55 | 0.64 | 59 | | | | | 38 | CA |
| | with grilles-between-the-glass | PEL-N-276-00584-00001 | | | | 0.28 | 0.50 | 0.57 | 59 | | | | | 34 | CA |
| 11/16" | NaturalSun Low-E IG | PEL-N-276-00587-00001 | 4 | 4 | argon | 0.29 | 0.54 | 0.63 | 57 | | | | | 35 | CA |
| | with grilles-between-the-glass | PEL-N-276-00588-00001 | | | | 0.30 | 0.48 | 0.56 | 57 | | | | | | |
| 11/16" | NaturalSun+ Low-E IG | PEL-N-276-01651-00001 | 3 | 3 | argon | 0.24 | 0.50 | 0.62 | 46 | N | | | | 39 | CA |
| | with grilles-between-the-glass | PEL-N-276-01652-00001 | | | | 0.24 | 0.45 | 0.56 | 46 | N | | | | 36 | CA |
| 11/16" | NaturalSun+ Low-E IG | PEL-N-276-01655-00001 | 4 | 4 | argon | 0.24 | 0.49 | 0.62 | 44 | N | | | | 38 | CA |
| | with grilles-between-the-glass | PEL-N-276-01656-00001 | | | | 0.25 | 0.44 | 0.55 | 44 | N | | | | 34 | CA |
| 1" | NaturalSun Low-E IG | PEL-N-276-00407-00001 | 5 | 5 | argon | 0.28 | 0.53 | 0.63 | 58 | | | | | 36 | CA |
| | with grilles-between-the-glass | PEL-N-276-00408-00001 | | | | 0.28 | 0.48 | 0.56 | 58 | | | | | | |
| 1" | NaturalSun Low-E IG | PEL-N-276-00411-00001 | 6 | 6 | argon | 0.28 | 0.52 | 0.62 | 58 | | | | | 35 | CA |
| | with grilles-between-the-glass | PEL-N-276-00412-00001 | | | | 0.28 | 0.47 | 0.55 | 58 | | | | | | |
| 1" | NaturalSun+ Low-E IG | PEL-N-276-01683-00001 | 5 | 5 | argon | 0.24 | 0.49 | 0.61 | 46 | N | | | | 38 | CA |
| | with grilles-between-the-glass | PEL-N-276-01684-00001 | | | | 0.24 | 0.44 | 0.55 | 46 | N | | | | 35 | CA |
| 1" | NaturalSun+ Low-E IG | PEL-N-276-01687-00001 | 6 | 6 | argon | 0.24 | 0.47 | 0.60 | 45 | N | | | | 37 | CA |
| | with grilles-between-the-glass | PEL-N-276-01688-00001 | | | | 0.24 | 0.42 | 0.54 | 45 | N | | | | 34 | CA |

R-Value = 1/U-Factor
SHGC = Solar Heat Gain Coefficient
VLT % = Visible Light Transmission
CR = Condensation Resistance
ER = Canadian Energy Rating

(1) Glazing performance values are calculated based on NFRC 100, NFRC 200 and NFRC 500. ENERGY STAR® values are updated to 2023 (version 7) criteria.

(2) The values shown are based on Canada's updated ENERGY STAR® 2020 initiative.

For center-glass values, see the Product Performance section.

Visit www.energystar.gov for Energy Star guidelines.

**Climate Zones**

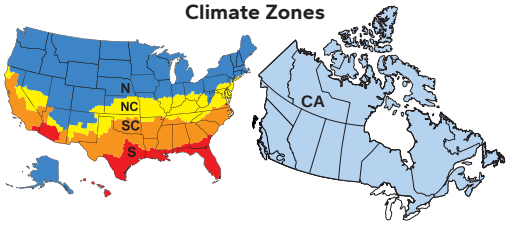

## Glazing Performance – Total Unit

| Glazing Thickness | Type of Glazing | NFRC Certified Product # | Glass (mm) Ext. | Glass (mm) Int. | Gap Fill | Performance Values[1] U-Factor | SHGC | VLT | CR | Shaded Areas Meet ENERGY STAR® Performance Criteria in Zones Shown U. S. Zone N | NC | SC | S | Canada[2] ER | Canada[2] Zone |
|---|---|---|---|---|---|---|---|---|---|---|---|---|---|---|---|
| **Fixed — High Altitude Glazing** | | | | | | | | | | | | | | | CA |
| 11/16" | (HA) Advanced Low-E IG | PEL-N-276-00233-00001 | 3 | 3 | air | 0.31 | 0.30 | 0.56 | 55 | | | | | | |
| | with grilles-between-the-glass | PEL-N-276-00234-00001 | | | | 0.33 | 0.27 | 0.50 | 55 | | | | | | |
| 11/16" | (HA) Advanced Low-E IG | PEL-N-276-00237-00001 | 4 | 4 | air | 0.33 | 0.30 | 0.56 | 53 | | | | | | |
| | with grilles-between-the-glass | PEL-N-276-00238-00001 | | | | 0.35 | 0.27 | 0.50 | 53 | | | | | | |
| 1" | (HA) Advanced Low-E IG | PEL-N-276-00017-00001 | 5 | 5 | air | 0.31 | 0.30 | 0.55 | 55 | | | | | | |
| | with grilles-between-the-glass | PEL-N-276-00018-00001 | | | | 0.31 | 0.27 | 0.49 | 55 | | | | | | |
| 1" | (HA) Advanced Low-E IG | PEL-N-276-00021-00001 | 6 | 6 | air | 0.31 | 0.29 | 0.54 | 55 | | | | | | |
| | with grilles-between-the-glass | PEL-N-276-00022-00001 | | | | 0.31 | 0.27 | 0.48 | 55 | | | | | | |
| 11/16" | (HA) SunDefense IG | PEL-N-276-00241-00001 | 3 | 3 | air | 0.31 | 0.23 | 0.52 | 56 | | | | S | | |
| | with grilles-between-the-glass | PEL-N-276-00242-00001 | | | | 0.32 | 0.21 | 0.46 | 56 | | | | S | | |
| 11/16" | (HA) SunDefense IG | PEL-N-276-00245-00001 | 4 | 4 | air | 0.33 | 0.23 | 0.52 | 53 | | | | | | |
| | with grilles-between-the-glass | PEL-N-276-00246-00001 | | | | 0.35 | 0.21 | 0.46 | 53 | | | | | | |
| 11/16" | (HA) SunDefense+ IG | PEL-N-276-00297-00001 | 3 | 3 | air | 0.26 | 0.22 | 0.51 | 43 | | | SC | S | | |
| | with grilles-between-the-glass | PEL-N-276-00298-00001 | | | | 0.27 | 0.20 | 0.45 | 43 | | | SC | S | | |
| 11/16" | (HA) SunDefense+ IG | PEL-N-276-00301-00001 | 4 | 4 | air | 0.27 | 0.22 | 0.50 | 41 | | | SC | S | | |
| | with grilles-between-the-glass | PEL-N-276-00302-00001 | | | | 0.29 | 0.20 | 0.45 | 41 | | | | S | | |
| 1" | (HA) SunDefense IG | PEL-N-276-00057-00001 | 5 | 5 | air | 0.31 | 0.22 | 0.51 | 56 | | | | S | | |
| | with grilles-between-the-glass | PEL-N-276-00058-00001 | | | | 0.31 | 0.20 | 0.46 | 56 | | | | S | | |
| 1" | (HA) SunDefense IG | PEL-N-276-00061-00001 | 6 | 6 | air | 0.30 | 0.23 | 0.50 | 55 | | | | S | | |
| | with grilles-between-the-glass | PEL-N-276-00062-00001 | | | | 0.30 | 0.20 | 0.45 | 55 | | | | S | | |
| 1" | (HA) SunDefense+ IG | PEL-N-276-00865-00001 | 5 | 5 | air | 0.25 | 0.22 | 0.50 | 44 | | NC | SC | S | | |
| | with grilles-between-the-glass | PEL-N-276-00866-00001 | | | | 0.25 | 0.20 | 0.45 | 44 | | NC | SC | S | | |
| 1" | (HA) SunDefense+ IG | PEL-N-276-00869-00001 | 6 | 6 | air | 0.25 | 0.22 | 0.49 | 43 | | NC | SC | S | | |
| | with grilles-between-the-glass | PEL-N-276-00870-00001 | | | | 0.25 | 0.20 | 0.44 | 43 | | NC | SC | S | | |
| 11/16" | (HA) AdvancedComfort Low-E IG | PEL-N-276-00257-00001 | 3 | 3 | air | 0.26 | 0.30 | 0.55 | 43 | | | | | | |
| | with grilles-between-the-glass | PEL-N-276-00258-00001 | | | | 0.27 | 0.27 | 0.49 | 43 | | | | | | |
| 11/16" | (HA) AdvancedComfort Low-E IG | PEL-N-276-00261-00001 | 4 | 4 | air | 0.28 | 0.29 | 0.54 | 41 | | | | | | |
| | with grilles-between-the-glass | PEL-N-276-00262-00001 | | | | 0.29 | 0.26 | 0.48 | 41 | | | | | | |
| 1" | (HA) AdvancedComfort Low-E IG | PEL-N-276-00857-00001 | 5 | 5 | air | 0.26 | 0.29 | 0.54 | 43 | | | | | | |
| | with grilles-between-the-glass | PEL-N-276-00858-00001 | | | | 0.26 | 0.26 | 0.48 | 43 | | | | | | |
| 1" | (HA) AdvancedComfort Low-E IG | PEL-N-276-00861-00001 | 6 | 6 | air | 0.25 | 0.29 | 0.53 | 43 | | NC | | | | |
| | with grilles-between-the-glass | PEL-N-276-00862-00001 | | | | 0.25 | 0.26 | 0.47 | 43 | | NC | | | | |
| 11/16" | (HA) NaturalSun Low-E IG | PEL-N-276-00249-00001 | 3 | 3 | air | 0.32 | 0.55 | 0.64 | 55 | | | | | | |
| | with grilles-between-the-glass | PEL-N-276-00250-00001 | | | | 0.32 | 0.50 | 0.57 | 55 | | | | | | |
| 11/16" | (HA) NaturalSun Low-E IG | PEL-N-276-00253-00001 | 4 | 4 | air | 0.34 | 0.54 | 0.63 | 52 | | | | | | |
| | with grilles-between-the-glass | PEL-N-276-00254-00001 | | | | 0.36 | 0.48 | 0.56 | 52 | | | | | | |
| 11/16" | (HA) NaturalSun+ Low-E IG | PEL-N-276-00817-00001 | 3 | 3 | air | 0.27 | 0.50 | 0.62 | 42 | | | | | 35 | CA |
| | with grilles-between-the-glass | PEL-N-276-00818-00001 | | | | 0.27 | 0.45 | 0.56 | 42 | | | | | | |
| 11/16" | (HA) NaturalSun+ Low-E IG | PEL-N-276-00821-00001 | 4 | 4 | air | 0.28 | 0.49 | 0.62 | 41 | | | | | | |
| | with grilles-between-the-glass | PEL-N-276-00822-00001 | | | | 0.29 | 0.44 | 0.55 | 41 | | | | | | |
| 1" | (HA) NaturalSun Low-E IG | PEL-N-276-00073-00001 | 5 | 5 | air | 0.32 | 0.53 | 0.63 | 55 | | | | | | |
| | with grilles-between-the-glass | PEL-N-276-00074-00001 | | | | 0.32 | 0.48 | 0.56 | 55 | | | | | | |
| 1" | (HA) NaturalSun Low-E IG | PEL-N-276-00077-00001 | 6 | 6 | air | 0.32 | 0.52 | 0.62 | 54 | | | | | | |
| | with grilles-between-the-glass | PEL-N-276-00078-00001 | | | | 0.32 | 0.47 | 0.55 | 54 | | | | | | |
| 1" | (HA) NaturalSun+ Low-E IG | PEL-N-276-00849-00001 | 5 | 5 | air | 0.26 | 0.48 | 0.61 | 43 | N | | | | 35 | CA |
| | with grilles-between-the-glass | PEL-N-276-00850-00001 | | | | 0.26 | 0.43 | 0.55 | 43 | N | | | | | |
| 1" | (HA) NaturalSun+ Low-E IG | PEL-N-276-00853-00001 | 6 | 6 | air | 0.26 | 0.47 | 0.60 | 42 | N | | | | 35 | CA |
| | with grilles-between-the-glass | PEL-N-276-00854-00001 | | | | 0.26 | 0.42 | 0.54 | 42 | N | | | | | |

R-Value = 1/U-Factor
SHGC = Solar Heat Gain Coefficient
VLT % = Visible Light Transmission
CR = Condensation Resistance
ER = Canadian Energy Rating

(1) Glazing performance values are calculated based on NFRC 100, NFRC 200 and NFRC 500. ENERGY STAR® values are updated to 2023 (version 7) criteria.

(2) The values shown are based on Canada's updated ENERGY STAR® 2020 initiative. For center-glass values, see the Product Performance section. Visit www.energystar.gov for Energy Star guidelines.

**Climate Zones**

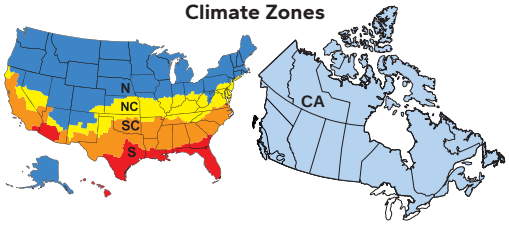

## Glazing Performance – Total Unit

| Glazing Thickness | Type of Glazing | NFRC Certified Product # | Glass (mm) Ext. | Glass (mm) Int. | Gap Fill | Performance Values[1] U-Factor | SHGC | VLT | CR | Shaded Areas Meet ENERGY STAR® Performance Criteria in Zones Shown U. S. Zone N | NC | SC | S | Canada[2] ER | Canada[2] Zone |
|---|---|---|---|---|---|---|---|---|---|---|---|---|---|---|---|
| **Fixed — High Altitude Glazing with Foam Insulation** | | | | | | | | | | | | | | | CA |
| 11/16" | (HA) Advanced Low-E IG | PEL-N-276-00565-00001 | 3 | 3 | air | 0.31 | 0.30 | 0.56 | 55 | | | | | | |
| | with grilles-between-the-glass | PEL-N-276-00566-00001 | | | | 0.32 | 0.27 | 0.50 | 55 | | | | | | |
| 11/16" | (HA) Advanced Low-E IG | PEL-N-276-00569-00001 | 4 | 4 | air | 0.33 | 0.30 | 0.56 | 53 | | | | | | |
| | with grilles-between-the-glass | PEL-N-276-00570-00001 | | | | 0.34 | 0.27 | 0.50 | 53 | | | | | | |
| 1" | (HA) Advanced Low-E IG | PEL-N-276-00349-00001 | 5 | 5 | air | 0.30 | 0.30 | 0.55 | 55 | | | | | | |
| | with grilles-between-the-glass | PEL-N-276-00350-00001 | | | | 0.30 | 0.27 | 0.49 | 55 | | | | | | |
| 1" | (HA) Advanced Low-E IG | PEL-N-276-00353-00001 | 6 | 6 | air | 0.30 | 0.29 | 0.54 | 55 | | | | | | |
| | with grilles-between-the-glass | PEL-N-276-00354-00001 | | | | 0.30 | 0.27 | 0.48 | 55 | | | | | | |
| 11/16" | (HA) SunDefense IG | PEL-N-276-00573-00001 | 3 | 3 | air | 0.30 | 0.23 | 0.52 | 56 | | | | S | | |
| | with grilles-between-the-glass | PEL-N-276-00574-00001 | | | | 0.32 | 0.21 | 0.46 | 56 | | | | S | | |
| 11/16" | (HA) SunDefense IG | PEL-N-276-00577-00001 | 4 | 4 | air | 0.32 | 0.23 | 0.52 | 53 | | | | S | | |
| | with grilles-between-the-glass | PEL-N-276-00578-00001 | | | | 0.34 | 0.21 | 0.46 | 53 | | | | | | |
| 11/16" | (HA) SunDefense+ IG | PEL-N-276-01665-00001 | 3 | 3 | air | 0.25 | 0.22 | 0.51 | 44 | | NC | SC | S | | |
| | with grilles-between-the-glass | PEL-N-276-00630-00001 | | | | 0.26 | 0.20 | 0.45 | 43 | | | SC | S | | |
| 11/16" | (HA) SunDefense+ IG | PEL-N-276-00633-00001 | 4 | 4 | air | 0.27 | 0.22 | 0.50 | 41 | | | SC | S | | |
| | with grilles-between-the-glass | PEL-N-276-00634-00001 | | | | 0.28 | 0.20 | 0.45 | 41 | | | SC | S | | |
| 1" | (HA) SunDefense IG | PEL-N-276-00389-00001 | 5 | 5 | air | 0.30 | 0.22 | 0.51 | 56 | | | | S | | |
| | with grilles-between-the-glass | PEL-N-276-00390-00001 | | | | 0.30 | 0.20 | 0.46 | 56 | | | | S | | |
| 1" | (HA) SunDefense IG | PEL-N-276-00393-00001 | 6 | 6 | air | 0.30 | 0.23 | 0.50 | 55 | | | | S | | |
| | with grilles-between-the-glass | PEL-N-276-00394-00001 | | | | 0.30 | 0.20 | 0.45 | 55 | | | | S | | |
| 1" | (HA) SunDefense+ IG | PEL-N-276-01697-00001 | 5 | 5 | air | 0.25 | 0.22 | 0.50 | 44 | | NC | SC | S | | |
| | with grilles-between-the-glass | PEL-N-276-01698-00001 | | | | 0.25 | 0.20 | 0.45 | 44 | | NC | SC | S | | |
| 1" | (HA) SunDefense+ IG | PEL-N-276-01701-00001 | 6 | 6 | air | 0.25 | 0.22 | 0.49 | 43 | | NC | SC | S | | |
| | with grilles-between-the-glass | PEL-N-276-01702-00001 | | | | 0.25 | 0.20 | 0.44 | 43 | | NC | SC | S | | |
| 11/16" | (HA) AdvancedComfort Low-E IG | PEL-N-276-01657-00001 | 3 | 3 | air | 0.26 | 0.30 | 0.55 | 43 | | | | | | |
| | with grilles-between-the-glass | PEL-N-276-00590-00001 | | | | 0.27 | 0.27 | 0.49 | 43 | | | | | | |
| 11/16" | (HA) AdvancedComfort Low-E IG | PEL-N-276-00593-00001 | 4 | 4 | air | 0.27 | 0.29 | 0.54 | 41 | | | | | | |
| | with grilles-between-the-glass | PEL-N-276-00594-00001 | | | | 0.28 | 0.26 | 0.48 | 41 | | | | | | |
| 1" | (HA) AdvancedComfort Low-E IG | PEL-N-276-01689-00001 | 5 | 5 | air | 0.26 | 0.29 | 0.54 | 43 | | | | | | |
| | with grilles-between-the-glass | PEL-N-276-01690-00001 | | | | 0.26 | 0.26 | 0.48 | 43 | | | | | | |
| 1" | (HA) AdvancedComfort Low-E IG | PEL-N-276-01693-00001 | 6 | 6 | air | 0.25 | 0.29 | 0.53 | 43 | | NC | | | | |
| | with grilles-between-the-glass | PEL-N-276-01694-00001 | | | | 0.25 | 0.26 | 0.47 | 43 | | NC | | | | |
| 11/16" | (HA) NaturalSun Low-E IG | PEL-N-276-00581-00001 | 3 | 3 | air | 0.32 | 0.55 | 0.64 | 55 | | | | | | |
| | with grilles-between-the-glass | PEL-N-276-00582-00001 | | | | 0.32 | 0.50 | 0.57 | 55 | | | | | | |
| 11/16" | (HA) NaturalSun Low-E IG | PEL-N-276-00585-00001 | 4 | 4 | air | 0.33 | 0.54 | 0.63 | 52 | | | | | | |
| | with grilles-between-the-glass | PEL-N-276-00586-00001 | | | | 0.35 | 0.48 | 0.56 | 52 | | | | | | |
| 11/16" | (HA) NaturalSun+ Low-E IG | PEL-N-276-01649-00001 | 3 | 3 | air | 0.26 | 0.50 | 0.62 | 43 | N | | | | 36 | CA |
| | with grilles-between-the-glass | PEL-N-276-01650-00001 | | | | 0.26 | 0.45 | 0.56 | 43 | N | | | | | |
| 11/16" | (HA) NaturalSun+ Low-E IG | PEL-N-276-01653-00001 | 4 | 4 | air | 0.27 | 0.49 | 0.62 | 41 | | | | | 35 | CA |
| | with grilles-between-the-glass | PEL-N-276-01654-00001 | | | | 0.29 | 0.44 | 0.55 | 41 | | | | | | |
| 1" | (HA) NaturalSun Low-E IG | PEL-N-276-00405-00001 | 5 | 5 | air | 0.31 | 0.53 | 0.63 | 55 | | | | | | |
| | with grilles-between-the-glass | PEL-N-276-00406-00001 | | | | 0.31 | 0.48 | 0.56 | 55 | | | | | | |
| 1" | (HA) NaturalSun Low-E IG | PEL-N-276-00409-00001 | 6 | 6 | air | 0.31 | 0.52 | 0.62 | 54 | | | | | | |
| | with grilles-between-the-glass | PEL-N-276-00410-00001 | | | | 0.31 | 0.47 | 0.55 | 54 | | | | | | |
| 1" | (HA) NaturalSun+ Low-E IG | PEL-N-276-01681-00001 | 5 | 5 | air | 0.26 | 0.48 | 0.61 | 43 | N | | | | 35 | CA |
| | with grilles-between-the-glass | PEL-N-276-01682-00001 | | | | 0.26 | 0.43 | 0.55 | 43 | N | | | | | |
| 1" | (HA) NaturalSun+ Low-E IG | PEL-N-276-01685-00001 | 6 | 6 | air | 0.26 | 0.47 | 0.60 | 42 | N | | | | 35 | CA |
| | with grilles-between-the-glass | PEL-N-276-01686-00001 | | | | 0.26 | 0.42 | 0.54 | 42 | N | | | | | |

R-Value = 1/U-Factor
SHGC = Solar Heat Gain Coefficient
VLT % = Visible Light Transmission
CR = Condensation Resistance
ER = Canadian Energy Rating

(1) Glazing performance values are calculated based on NFRC 100, NFRC 200 and NFRC 500.
ENERGY STAR® values are updated to 2023 (version 7) criteria.
(2) The values shown are based on Canada's updated ENERGY STAR® 2020 initiative.
For center-glass values, see the Product Performance section.
Visit www.energystar.gov for Energy Star guidelines.

**Climate Zones**

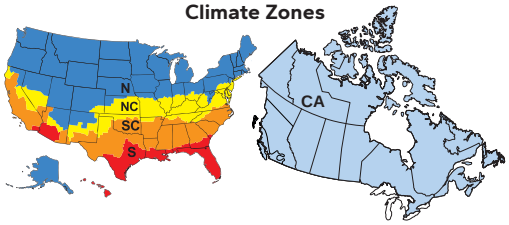

## Glazing Performance – Total Unit

| Glazing Thickness | Type of Glazing | NFRC Certified Product # | Glass (mm) | | Gap Fill | Performance Values[1] | | | | Shaded Areas Meet ENERGY STAR® Performance Criteria in Zones Shown | | | | | |
|---|---|---|---|---|---|---|---|---|---|---|---|---|---|---|---|
| | | | Ext. | Int. | | U-Factor | SHGC | VLT | CR | U. S. Zone | | | | Canada[2] ER | Canada[2] Zone |
| | | | | | | | | | | N | NC | SC | S | | CA |
| **Fixed — 5mm/3mm Glass** | | | | | | | | | | | | | | | |
| 1" | Clear IG | PEL-N-276-00009-00001 | 5 | 3 | air | 0.45 | 0.61 | 0.66 | 45 | | | | | | |
| | with grilles-between-the-glass | PEL-N-276-00010-00001 | | | | 0.45 | 0.55 | 0.59 | 45 | | | | | | |
| 1" | Advanced Low-E IG | PEL-N-276-00051-00001 | 5 | 3 | argon | 0.28 | 0.29 | 0.55 | 60 | | | | | | |
| | with grilles-between-the-glass | PEL-N-276-00052-00001 | | | | 0.28 | 0.27 | 0.50 | 60 | | | | | | |
| 1" | SunDefense™ IG | PEL-N-276-00067-00001 | 5 | 3 | argon | 0.27 | 0.22 | 0.52 | 60 | | | SC | S | | |
| | with grilles-between-the-glass | PEL-N-276-00068-00001 | | | | 0.27 | 0.20 | 0.46 | 60 | | | SC | S | | |
| 1" | SunDefense+ IG | PEL-N-276-00891-00001 | 5 | 3 | argon | 0.23 | 0.22 | 0.50 | 48 | | NC | SC | S | | |
| | with grilles-between-the-glass | PEL-N-276-00892-00001 | | | | 0.23 | 0.20 | 0.45 | 48 | | NC | SC | S | | |
| 1" | AdvancedComfort Low-E IG | PEL-N-276-00887-00001 | 5 | 3 | argon | 0.24 | 0.29 | 0.54 | 48 | | NC | | | | |
| | with grilles-between-the-glass | PEL-N-276-00888-00001 | | | | 0.24 | 0.26 | 0.48 | 48 | | NC | | | | |
| 1" | NaturalSun Low-E IG | PEL-N-276-00083-00001 | 5 | 3 | argon | 0.29 | 0.54 | 0.63 | 60 | | | | | 35 | CA |
| | with grilles-between-the-glass | PEL-N-276-00084-00001 | | | | 0.29 | 0.48 | 0.56 | 60 | | | | | | |
| 1" | NaturalSun+ Low-E IG | PEL-N-276-00883-00001 | 5 | 3 | argon | 0.24 | 0.49 | 0.62 | 47 | N | | | | 38 | CA |
| | with grilles-between-the-glass | PEL-N-276-00884-00001 | | | | 0.24 | 0.44 | 0.55 | 47 | N | | | | 35 | CA |
| **Fixed — 5mm/3mm Glass with Foam Insulation** | | | | | | | | | | | | | | | |
| 1" | Advanced Low-E IG | PEL-N-276-00383-00001 | 5 | 3 | argon | 0.27 | 0.29 | 0.55 | 60 | | | | | | |
| | with grilles-between-the-glass | PEL-N-276-00384-00001 | | | | 0.27 | 0.27 | 0.50 | 60 | | | | | | |
| 1" | SunDefense IG | PEL-N-276-00399-00001 | 5 | 3 | argon | 0.27 | 0.22 | 0.52 | 61 | | | SC | S | | |
| | with grilles-between-the-glass | PEL-N-276-00400-00001 | | | | 0.27 | 0.20 | 0.46 | 61 | | | SC | S | | |
| 1" | SunDefense+ IG | PEL-N-276-01723-00001 | 5 | 3 | argon | 0.23 | 0.22 | 0.50 | 48 | | NC | SC | S | | |
| | with grilles-between-the-glass | PEL-N-276-01724-00001 | | | | 0.23 | 0.20 | 0.45 | 48 | | NC | SC | S | | |
| 1" | AdvancedComfort Low-E IG | PEL-N-276-01719-00001 | 5 | 3 | argon | 0.23 | 0.29 | 0.54 | 48 | | NC | | | | |
| | with grilles-between-the-glass | PEL-N-276-01720-00001 | | | | 0.23 | 0.26 | 0.48 | 48 | | NC | | | | |
| 1" | NaturalSun Low-E IG | PEL-N-276-00415-00001 | 5 | 3 | argon | 0.28 | 0.54 | 0.63 | 60 | | | | | 36 | CA |
| | with grilles-between-the-glass | PEL-N-276-00416-00001 | | | | 0.28 | 0.48 | 0.56 | 60 | | | | | | |
| 1" | NaturalSun+ Low-E IG | PEL-N-276-01715-00001 | 5 | 3 | argon | 0.24 | 0.49 | 0.62 | 47 | N | | | | 38 | CA |
| | with grilles-between-the-glass | PEL-N-276-01716-00001 | | | | 0.24 | 0.44 | 0.55 | 47 | N | | | | 35 | CA |
| **Fixed — 5mm/3mm Glass High Altitude Glazing** | | | | | | | | | | | | | | | |
| 1" | (HA) Advanced Low-E IG | PEL-N-276-00049-00001 | 5 | 3 | air | 0.31 | 0.30 | 0.55 | 56 | | | | | | |
| | with grilles-between-the-glass | PEL-N-276-00050-00001 | | | | 0.31 | 0.27 | 0.50 | 56 | | | | | | |
| 1" | (HA) SunDefense IG | PEL-N-276-00065-00001 | 5 | 3 | air | 0.31 | 0.22 | 0.52 | 57 | | | | S | | |
| | with grilles-between-the-glass | PEL-N-276-00066-00001 | | | | 0.31 | 0.20 | 0.46 | 57 | | | | S | | |
| 1" | (HA) SunDefense+ IG | PEL-N-276-00889-00001 | 5 | 3 | air | 0.26 | 0.22 | 0.50 | 45 | | | SC | S | | |
| | with grilles-between-the-glass | PEL-N-276-00890-00001 | | | | 0.26 | 0.20 | 0.45 | 45 | | | SC | S | | |
| 1" | (HA) AdvancedComfort Low-E IG | PEL-N-276-00885-00001 | 5 | 3 | air | 0.26 | 0.29 | 0.54 | 44 | | | | | | |
| | with grilles-between-the-glass | PEL-N-276-00886-00001 | | | | 0.26 | 0.26 | 0.48 | 44 | | | | | | |
| 1" | (HA) NaturalSun Low-E IG | PEL-N-276-00081-00001 | 5 | 3 | air | 0.32 | 0.54 | 0.63 | 56 | | | | | | |
| | with grilles-between-the-glass | PEL-N-276-00082-00001 | | | | 0.32 | 0.48 | 0.56 | 56 | | | | | | |
| 1" | (HA) NaturalSun+ Low-E IG | PEL-N-276-00881-00001 | 5 | 3 | air | 0.27 | 0.49 | 0.62 | 44 | | | | | 35 | CA |
| | with grilles-between-the-glass | PEL-N-276-00882-00001 | | | | 0.27 | 0.44 | 0.55 | 44 | | | | | | |
| **Fixed — 5mm/3mm Glass High Altitude Glazing — with Foam Insulation** | | | | | | | | | | | | | | | |
| 1" | (HA) Advanced Low-E IG | PEL-N-276-00381-00001 | 5 | 3 | air | 0.31 | 0.30 | 0.55 | 57 | | | | | | |
| | with grilles-between-the-glass | PEL-N-276-00382-00001 | | | | 0.31 | 0.27 | 0.50 | 57 | | | | | | |
| 1" | (HA) SunDefense IG | PEL-N-276-00397-00001 | 5 | 3 | air | 0.30 | 0.22 | 0.52 | 57 | | | | S | | |
| | with grilles-between-the-glass | PEL-N-276-00398-00001 | | | | 0.30 | 0.20 | 0.46 | 57 | | | | S | | |
| 1" | (HA) SunDefense+ IG | PEL-N-276-01721-00001 | 5 | 3 | air | 0.26 | 0.22 | 0.50 | 45 | | | SC | S | | |
| | with grilles-between-the-glass | PEL-N-276-01722-00001 | | | | 0.26 | 0.20 | 0.45 | 45 | | | SC | S | | |
| 1" | (HA) AdvancedComfort Low-E IG | PEL-N-276-01717-00001 | 5 | 3 | air | 0.26 | 0.29 | 0.54 | 44 | | | | | | |
| | with grilles-between-the-glass | PEL-N-276-01718-00001 | | | | 0.26 | 0.26 | 0.48 | 44 | | | | | | |
| 1" | (HA) NaturalSun Low-E IG | PEL-N-276-00413-00001 | 5 | 3 | air | 0.32 | 0.54 | 0.63 | 56 | | | | | | |
| | with grilles-between-the-glass | PEL-N-276-00414-00001 | | | | 0.32 | 0.48 | 0.56 | 56 | | | | | | |
| 1" | (HA) NaturalSun+ Low-E IG | PEL-N-276-01713-00001 | 5 | 3 | air | 0.26 | 0.49 | 0.62 | 44 | N | | | | 36 | CA |
| | with grilles-between-the-glass | PEL-N-276-01714-00001 | | | | 0.26 | 0.44 | 0.55 | 44 | N | | | | | |

(1) Glazing performance values are calculated based on NFRC 100, NFRC 200 and NFRC 500. ENERGY STAR® values are updated to 2023 (version 7) criteria.
(2) The values shown are based on Canada's updated ENERGY STAR® 2020 initiative.
For center-glass values, see the Product Performance section.
Visit www.energystar.gov for Energy Star guidelines.

R-Value = 1/U-Factor
SHGC = Solar Heat Gain Coefficient
VLT % = Visible Light Transmission
CR = Condensation Resistance
ER = Canadian Energy Rating

## Glazing Performance – Total Unit

| Glazing Thickness | Type of Glazing | NFRC Certified Product # | Glass (mm) | | Gap Fill | Performance Values[1] | | | | Shaded Areas Meet ENERGY STAR® Performance Criteria in Zones Shown | | | | | |
|---|---|---|---|---|---|---|---|---|---|---|---|---|---|---|---|
| | | | Ext. | Int. | | U-Factor | SHGC | VLT | CR | U. S. | | | | Canada[2] | |
| | | | | | | | | | | Zone | | | | ER | Zone |
| **Fixed — 4mm/6mm Glass** | | | | | | | | | | N | NC | SC | S | | CA |
| 1" | Clear IG | PEL-N-276-00013-00001 | 4 | 6 | air | 0.45 | 0.60 | 0.65 | 44 | | | | | | |
| | with grilles-between-the-glass | PEL-N-276-00014-00001 | | | | 0.45 | 0.54 | 0.58 | 44 | | | | | | |
| 1" | Advanced Low-E IG | PEL-N-276-00055-00001 | 4 | 6 | argon | 0.27 | 0.29 | 0.55 | 58 | | | | | | |
| | with grilles-between-the-glass | PEL-N-276-00056-00001 | | | | 0.27 | 0.27 | 0.49 | 58 | | | | | | |
| 1" | SunDefense™ IG | PEL-N-276-00071-00001 | 4 | 6 | argon | 0.27 | 0.22 | 0.51 | 59 | | | SC | S | | |
| | with grilles-between-the-glass | PEL-N-276-00072-00001 | | | | 0.27 | 0.20 | 0.46 | 59 | | | SC | S | | |
| 1" | SunDefense+ IG | PENDING | 4 | 6 | argon | | | | | | | | | | |
| | with grilles-between-the-glass | PENDING | | | | | | | | | | | | | |
| 1" | AdvancedComfort Low-E IG | PEL-N-276-00103-00001 | 4 | 6 | argon | 0.23 | 0.29 | 0.54 | 46 | | NC | | | | |
| | with grilles-between-the-glass | PEL-N-276-00104-00001 | | | | 0.23 | 0.26 | 0.48 | 46 | | NC | | | | |
| 1" | NaturalSun Low-E IG | PEL-N-276-00087-00001 | 4 | 6 | argon | 0.28 | 0.54 | 0.62 | 58 | | | | | 36 | CA |
| | with grilles-between-the-glass | PEL-N-276-00088-00001 | | | | 0.28 | 0.49 | 0.56 | 58 | | | | | | |
| 1" | NaturalSun+ Low-E IG | PENDING | 4 | 6 | argon | | | | | | | | | | |
| | with grilles-between-the-glass | PENDING | | | | | | | | | | | | | |
| **Fixed — 4mm/6mm Glass with Foam Insulation** | | | | | | | | | | | | | | | |
| 1" | Advanced Low-E IG | PEL-N-276-00387-00001 | 4 | 6 | argon | 0.27 | 0.29 | 0.55 | 58 | | | | | | |
| | with grilles-between-the-glass | PEL-N-276-00388-00001 | | | | 0.27 | 0.27 | 0.49 | 58 | | | | | | |
| 1" | SunDefense IG | PEL-N-276-00403-00001 | 4 | 6 | argon | 0.26 | 0.22 | 0.51 | 59 | | | SC | S | | |
| | with grilles-between-the-glass | PEL-N-276-00404-00001 | | | | 0.26 | 0.20 | 0.46 | 59 | | | SC | S | | |
| 1" | SunDefense+ IG | PENDING | 4 | 6 | argon | | | | | | | | | | |
| | with grilles-between-the-glass | PENDING | | | | | | | | | | | | | |
| 1" | AdvancedComfort Low-E IG | PEL-N-276-00435-00001 | 4 | 6 | argon | 0.22 | 0.29 | 0.54 | 47 | X | NC | | | | |
| | with grilles-between-the-glass | PEL-N-276-00436-00001 | | | | 0.22 | 0.26 | 0.48 | 47 | X | NC | | | | |
| 1" | NaturalSun Low-E IG | PEL-N-276-00419-00001 | 4 | 6 | argon | 0.28 | 0.54 | 0.62 | 58 | | | | | 36 | CA |
| | with grilles-between-the-glass | PEL-N-276-00420-00001 | | | | 0.28 | 0.49 | 0.56 | 58 | | | | | | |
| 1" | NaturalSun+ Low-E IG | PENDING | 4 | 6 | argon | | | | | | | | | | |
| | with grilles-between-the-glass | PENDING | | | | | | | | | | | | | |
| **Fixed — 4mm/6mm Glass High Altitude Glazing** | | | | | | | | | | | | | | | |
| 1" | (HA) Advanced Low-E IG | PEL-N-276-00053-00001 | 4 | 6 | air | 0.31 | 0.30 | 0.55 | 55 | | | | | | |
| | with grilles-between-the-glass | PEL-N-276-00054-00001 | | | | 0.31 | 0.27 | 0.49 | 55 | | | | | | |
| 1" | (HA) SunDefense IG | PEL-N-276-00069-00001 | 4 | 6 | air | 0.31 | 0.22 | 0.51 | 55 | | | | S | | |
| | with grilles-between-the-glass | PEL-N-276-00070-00001 | | | | 0.31 | 0.20 | 0.46 | 55 | | | | S | | |
| 1" | (HA) SunDefense+ IG | PENDING | 4 | 6 | air | | | | | | | | | | |
| | with grilles-between-the-glass | PENDING | | | | | | | | | | | | | |
| 1" | (HA) AdvancedComfort Low-E IG | PEL-N-276-00101-00001 | 4 | 6 | air | 0.26 | 0.29 | 0.54 | 43 | | | | | | |
| | with grilles-between-the-glass | PEL-N-276-00102-00001 | | | | 0.26 | 0.26 | 0.48 | 43 | | | | | | |
| 1" | (HA) NaturalSun Low-E IG | PEL-N-276-00085-00001 | 4 | 6 | air | 0.32 | 0.54 | 0.62 | 54 | | | | | | |
| | with grilles-between-the-glass | PEL-N-276-00086-00001 | | | | 0.32 | 0.48 | 0.56 | 54 | | | | | | |
| 1" | (HA) NaturalSun+ Low-E IG | PENDING | 4 | 6 | air | | | | | | | | | | |
| | with grilles-between-the-glass | PENDING | | | | | | | | | | | | | |
| **Fixed — 4mm/6mm Glass High Altitude Glazing — with Foam Insulation** | | | | | | | | | | | | | | | |
| 1" | (HA) Advanced Low-E IG | PEL-N-276-00385-00001 | 4 | 6 | air | 0.30 | 0.30 | 0.55 | 55 | | | | | | |
| | with grilles-between-the-glass | PEL-N-276-00386-00001 | | | | 0.30 | 0.27 | 0.49 | 55 | | | | | | |
| 1" | (HA) SunDefense IG | PEL-N-276-00401-00001 | 4 | 6 | air | 0.30 | 0.22 | 0.51 | 55 | | | | S | | |
| | with grilles-between-the-glass | PEL-N-276-00402-00001 | | | | 0.30 | 0.20 | 0.46 | 55 | | | | S | | |
| 1" | (HA) SunDefense+ IG | PENDING | 4 | 6 | air | | | | | | | | | | |
| | with grilles-between-the-glass | PENDING | | | | | | | | | | | | | |
| 1" | (HA) AdvancedComfort Low-E IG | PEL-N-276-00433-00001 | 4 | 6 | air | 0.25 | 0.29 | 0.54 | 44 | | NC | | | | |
| | with grilles-between-the-glass | PEL-N-276-00434-00001 | | | | 0.25 | 0.26 | 0.48 | 44 | | NC | | | | |
| 1" | (HA) NaturalSun Low-E IG | PEL-N-276-00417-00001 | 4 | 6 | air | 0.31 | 0.54 | 0.62 | 55 | | | | | | |
| | with grilles-between-the-glass | PEL-N-276-00418-00001 | | | | 0.31 | 0.48 | 0.56 | 55 | | | | | | |
| 1" | (HA) NaturalSun+ Low-E IG | PENDING | 4 | 6 | air | | | | | | | | | | |
| | with grilles-between-the-glass | PENDING | | | | | | | | | | | | | |

(1) Glazing performance values are calculated based on NFRC 100, NFRC 200 and NFRC 500.
ENERGY STAR® values are updated to 2023 (version 7) criteria.
(2) The values shown are based on Canada's updated ENERGY STAR® 2020 initiative.
For center-glass values, see the Product Performance section.
Visit www.energystar.gov for Energy Star guidelines.

R-Value = 1/U-Factor
SHGC = Solar Heat Gain Coefficient
VLT % = Visible Light Transmission
CR = Condensation Resistance
ER = Canadian Energy Rating

## Glazing Performance – Total Unit

| Glazing Thickness | Type of Glazing | NFRC Certified Product # | Glass (mm) Ext. | Glass (mm) Int. | Gap Fill | Performance Values[1] U-Factor | SHGC | VLT | CR | Shaded Areas Meet ENERGY STAR® Performance Criteria in Zones Shown U. S. Zone N | NC | SC | S | Canada[2] ER | Canada[2] Zone CA |
|---|---|---|---|---|---|---|---|---|---|---|---|---|---|---|---|
| **Fixed — with Tinted Glazing** | | | | | | | | | | | | | | | |
| 11/16" | Bronze Advanced Low-E IG | PEL-N-276-00275-00001 | 5 | 3 | argon | 0.28 | 0.27 | 0.36 | 58 | | | | | | |
| | with grilles-between-the-glass | PEL-N-276-00276-00001 | | | | 0.30 | 0.24 | 0.32 | 58 | | | | | | |
| 1" | Bronze Advanced Low-E IG | PEL-N-276-00027-00001 | 5 | 5 | argon | 0.27 | 0.26 | 0.36 | 59 | | | | | | |
| | with grilles-between-the-glass | PEL-N-276-00028-00001 | | | | 0.27 | 0.24 | 0.32 | 59 | | | | | | |
| 1" | Bronze Advanced Low-E IG | PEL-N-276-00039-00001 | 6 | 6 | argon | 0.27 | 0.25 | 0.32 | 58 | | | | | | |
| | with grilles-between-the-glass | PEL-N-276-00040-00001 | | | | 0.27 | 0.22 | 0.29 | 58 | | | SC | S | | |
| 11/16" | Gray Advanced Low-E IG | PEL-N-276-00279-00001 | 5 | 3 | argon | 0.28 | 0.25 | 0.31 | 58 | | | | | | |
| | with grilles-between-the-glass | PEL-N-276-00280-00001 | | | | 0.30 | 0.22 | 0.28 | 58 | | | | S | | |
| 1" | Gray Advanced Low-E IG | PEL-N-276-00031-00001 | 5 | 5 | argon | 0.27 | 0.24 | 0.31 | 59 | | | | | | |
| | with grilles-between-the-glass | PEL-N-276-00032-00001 | | | | 0.27 | 0.22 | 0.28 | 59 | | | SC | S | | |
| 1" | Gray Advanced Low-E IG | PEL-N-276-00043-00001 | 6 | 6 | argon | 0.27 | 0.22 | 0.27 | 58 | | | SC | S | | |
| | with grilles-between-the-glass | PEL-N-276-00044-00001 | | | | 0.27 | 0.20 | 0.24 | 58 | | | SC | S | | |
| 11/16" | Green Advanced Low-E IG | PEL-N-276-00283-00001 | 5 | 3 | argon | 0.28 | 0.30 | 0.49 | 58 | | | | | | |
| | with grilles-between-the-glass | PEL-N-276-00284-00001 | | | | 0.30 | 0.27 | 0.44 | 58 | | | | | | |
| 1" | Green Advanced Low-E IG | PEL-N-276-00035-00001 | 5 | 5 | argon | 0.27 | 0.30 | 0.49 | 59 | | | | | | |
| | with grilles-between-the-glass | PEL-N-276-00036-00001 | | | | 0.27 | 0.27 | 0.44 | 59 | | | | | | |
| 1" | Green Advanced Low-E IG | PEL-N-276-00047-00001 | 6 | 6 | argon | 0.27 | 0.28 | 0.47 | 58 | | | | | | |
| | with grilles-between-the-glass | PEL-N-276-00048-00001 | | | | 0.27 | 0.26 | 0.42 | 58 | | | | | | |
| **Fixed — with Foam Insulation and Tinted Glazing** | | | | | | | | | | | | | | | |
| 11/16" | Bronze Advanced Low-E IG | PEL-N-276-00607-00001 | 5 | 3 | argon | 0.28 | 0.27 | 0.36 | 58 | | | | | | |
| | with grilles-between-the-glass | PEL-N-276-00608-00001 | | | | 0.29 | 0.24 | 0.32 | 58 | | | | | | |
| 1" | Bronze Advanced Low-E IG | PEL-N-276-00359-00001 | 5 | 5 | argon | 0.27 | 0.26 | 0.36 | 59 | | | | | | |
| | with grilles-between-the-glass | PEL-N-276-00360-00001 | | | | 0.27 | 0.24 | 0.32 | 59 | | | | | | |
| 1" | Bronze Advanced Low-E IG | PEL-N-276-00371-00001 | 6 | 6 | argon | 0.27 | 0.25 | 0.32 | 58 | | | | | | |
| | with grilles-between-the-glass | PEL-N-276-00372-00001 | | | | 0.27 | 0.22 | 0.29 | 58 | | | SC | S | | |
| 11/16" | Gray Advanced Low-E IG | PEL-N-276-00611-00001 | 5 | 3 | argon | 0.28 | 0.25 | 0.31 | 58 | | | | | | |
| | with grilles-between-the-glass | PEL-N-276-00612-00001 | | | | 0.29 | 0.22 | 0.28 | 58 | | | | S | | |
| 1" | Gray Advanced Low-E IG | PEL-N-276-00363-00001 | 5 | 5 | argon | 0.27 | 0.24 | 0.31 | 59 | | | | | | |
| | with grilles-between-the-glass | PEL-N-276-00364-00001 | | | | 0.27 | 0.22 | 0.28 | 59 | | | SC | S | | |
| 1" | Gray Advanced Low-E IG | PEL-N-276-00375-00001 | 6 | 6 | argon | 0.27 | 0.22 | 0.27 | 58 | | | SC | S | | |
| | with grilles-between-the-glass | PEL-N-276-00376-00001 | | | | 0.27 | 0.20 | 0.24 | 58 | | | SC | S | | |
| 11/16" | Green Advanced Low-E IG | PEL-N-276-00615-00001 | 5 | 3 | argon | 0.28 | 0.30 | 0.49 | 58 | | | | | | |
| | with grilles-between-the-glass | PEL-N-276-00616-00001 | | | | 0.29 | 0.27 | 0.44 | 58 | | | | | | |
| 1" | Green Advanced Low-E IG | PEL-N-276-00367-00001 | 5 | 5 | argon | 0.27 | 0.30 | 0.49 | 59 | | | | | | |
| | with grilles-between-the-glass | PEL-N-276-00368-00001 | | | | 0.27 | 0.27 | 0.44 | 59 | | | | | | |
| 1" | Green Advanced Low-E IG | PEL-N-276-00379-00001 | 6 | 6 | argon | 0.27 | 0.28 | 0.47 | 58 | | | | | | |
| | with grilles-between-the-glass | PEL-N-276-00380-00001 | | | | 0.27 | 0.26 | 0.42 | 58 | | | | | | |

R-Value = 1/U-Factor
SHGC = Solar Heat Gain Coefficient
VLT % = Visible Light Transmission
CR = Condensation Resistance
ER = Canadian Energy Rating

(1) Glazing performance values are calculated based on NFRC 100, NFRC 200 and NFRC 500. ENERGY STAR® values are updated to 2023 (version 7) criteria.

(2) The values shown are based on Canada's updated ENERGY STAR® 2020 initiative. For center-glass values, see the Product Performance section. Visit www.energystar.gov for Energy Star guidelines.

**Climate Zones**

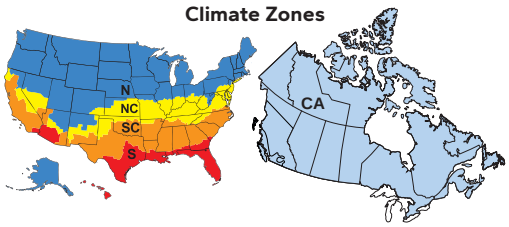

## Glazing Performance – Total Unit

| Glazing Thickness | Type of Glazing | NFRC Certified Product # | Glass (mm) Ext. | Glass (mm) Int. | Gap Fill | Performance Values[1] U-Factor | SHGC | VLT | CR | Shaded Areas Meet ENERGY STAR® Performance Criteria in Zones Shown U. S. Zone N | NC | SC | S | Canada[2] ER | Canada[2] Zone CA |
|---|---|---|---|---|---|---|---|---|---|---|---|---|---|---|---|
| **Fixed — High Altitude Glazing — with Tinted Glazing** | | | | | | | | | | | | | | | |
| 11/16" | Bronze Advanced Low-E IG | PEL-N-276-00273-00001 | 5 | 3 | air | 0.33 | 0.27 | 0.36 | 54 | | | | | | |
| | with grilles-between-the-glass | PEL-N-276-00274-00001 | | | | 0.35 | 0.25 | 0.32 | 54 | | | | | | |
| 1" | Bronze Advanced Low-E IG | PEL-N-276-00025-00001 | 5 | 5 | air | 0.31 | 0.27 | 0.36 | 56 | | | | | | |
| | with grilles-between-the-glass | PEL-N-276-00026-00001 | | | | 0.31 | 0.24 | 0.32 | 56 | | | | | | |
| 1" | Bronze Advanced Low-E IG | PEL-N-276-00037-00001 | 6 | 6 | air | 0.31 | 0.25 | 0.32 | 55 | | | | | | |
| | with grilles-between-the-glass | PEL-N-276-00038-00001 | | | | 0.31 | 0.23 | 0.29 | 55 | | | | S | | |
| 11/16" | Gray Advanced Low-E IG | PEL-N-276-00277-00001 | 5 | 3 | air | 0.33 | 0.25 | 0.31 | 54 | | | | | | |
| | with grilles-between-the-glass | PEL-N-276-00278-00001 | | | | 0.35 | 0.23 | 0.28 | 54 | | | | | | |
| 1" | Gray Advanced Low-E IG | PEL-N-276-00029-00001 | 5 | 5 | air | 0.31 | 0.24 | 0.31 | 56 | | | | | | |
| | with grilles-between-the-glass | PEL-N-276-00030-00001 | | | | 0.31 | 0.22 | 0.28 | 56 | | | | S | | |
| 1" | Gray Advanced Low-E IG | PEL-N-276-00041-00001 | 6 | 6 | air | 0.31 | 0.22 | 0.27 | 55 | | | | S | | |
| | with grilles-between-the-glass | PEL-N-276-00042-00001 | | | | 0.31 | 0.20 | 0.24 | 55 | | | | S | | |
| 11/16" | Green Advanced Low-E IG | PEL-N-276-00281-00001 | 5 | 3 | air | 0.33 | 0.31 | 0.49 | 54 | | | | | | |
| | with grilles-between-the-glass | PEL-N-276-00282-00001 | | | | 0.35 | 0.28 | 0.44 | 54 | | | | | | |
| 1" | Green Advanced Low-E IG | PEL-N-276-00033-00001 | 5 | 5 | air | 0.31 | 0.30 | 0.49 | 56 | | | | | | |
| | with grilles-between-the-glass | PEL-N-276-00034-00001 | | | | 0.31 | 0.27 | 0.44 | 56 | | | | | | |
| 1" | Green Advanced Low-E IG | PEL-N-276-00045-00001 | 6 | 6 | air | 0.31 | 0.29 | 0.47 | 55 | | | | | | |
| | with grilles-between-the-glass | PEL-N-276-00046-00001 | | | | 0.31 | 0.26 | 0.42 | 55 | | | | | | |
| **Fixed — High Altitude Glazing — with Foam Insulation and Tinted Glazing** | | | | | | | | | | | | | | | |
| 11/16" | Bronze Advanced Low-E IG | PEL-N-276-00605-00001 | 5 | 3 | air | 0.33 | 0.27 | 0.36 | 54 | | | | | | |
| | with grilles-between-the-glass | PEL-N-276-00606-00001 | | | | 0.34 | 0.25 | 0.32 | 54 | | | | | | |
| 1" | Bronze Advanced Low-E IG | PEL-N-276-00357-00001 | 5 | 5 | air | 0.30 | 0.27 | 0.36 | 56 | | | | | | |
| | with grilles-between-the-glass | PEL-N-276-00358-00001 | | | | 0.30 | 0.24 | 0.32 | 56 | | | | | | |
| 1" | Bronze Advanced Low-E IG | PEL-N-276-00369-00001 | 6 | 6 | air | 0.30 | 0.25 | 0.32 | 55 | | | | | | |
| | with grilles-between-the-glass | PEL-N-276-00370-00001 | | | | 0.30 | 0.23 | 0.29 | 55 | | | | S | | |
| 11/16" | Gray Advanced Low-E IG | PEL-N-276-00609-00001 | 5 | 3 | air | 0.33 | 0.25 | 0.31 | 54 | | | | | | |
| | with grilles-between-the-glass | PEL-N-276-00610-00001 | | | | 0.34 | 0.23 | 0.28 | 54 | | | | | | |
| 1" | Gray Advanced Low-E IG | PEL-N-276-00361-00001 | 5 | 5 | air | 0.30 | 0.24 | 0.31 | 56 | | | | | | |
| | with grilles-between-the-glass | PEL-N-276-00362-00001 | | | | 0.30 | 0.22 | 0.28 | 56 | | | | S | | |
| 1" | Gray Advanced Low-E IG | PEL-N-276-00373-00001 | 6 | 6 | air | 0.30 | 0.22 | 0.27 | 55 | | | | S | | |
| | with grilles-between-the-glass | PEL-N-276-00374-00001 | | | | 0.30 | 0.20 | 0.24 | 55 | | | | S | | |
| 11/16" | Green Advanced Low-E IG | PEL-N-276-00613-00001 | 5 | 3 | air | 0.33 | 0.31 | 0.49 | 54 | | | | | | |
| | with grilles-between-the-glass | PEL-N-276-00614-00001 | | | | 0.34 | 0.28 | 0.44 | 54 | | | | | | |
| 1" | Green Advanced Low-E IG | PEL-N-276-00365-00001 | 5 | 5 | air | 0.30 | 0.30 | 0.49 | 56 | | | | | | |
| | with grilles-between-the-glass | PEL-N-276-00366-00001 | | | | 0.30 | 0.27 | 0.44 | 56 | | | | | | |
| 1" | Green Advanced Low-E IG | PEL-N-276-00377-00001 | 6 | 6 | air | 0.30 | 0.29 | 0.47 | 55 | | | | | | |
| | with grilles-between-the-glass | PEL-N-276-00378-00001 | | | | 0.30 | 0.26 | 0.42 | 55 | | | | | | |

R-Value = 1/U-Factor
SHGC = Solar Heat Gain Coefficient
VLT % = Visible Light Transmission
CR = Condensation Resistance
ER = Canadian Energy Rating

(1) Glazing performance values are calculated based on NFRC 100, NFRC 200 and NFRC 500. ENERGY STAR® values are updated to 2023 (version 7) criteria.

(2) The values shown are based on Canada's updated ENERGY STAR® 2020 initiative. For center-glass values, see the Product Performance section. Visit www.energystar.gov for Energy Star guidelines.

**Climate Zones**

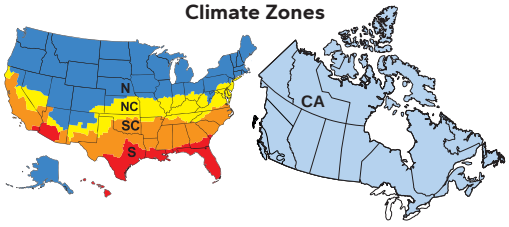

## Glazing Performance – Total Unit

| Glazing Thickness | Type of Glazing | NFRC Certified Product # | Glass (mm) Ext. | Glass (mm) Int. | Gap Fill | Performance Values[1] U-Factor | SHGC | VLT | CR | Shaded Areas Meet ENERGY STAR® Performance Criteria in Zones Shown U. S. Zone N | NC | SC | S | Canada[2] ER | Canada[2] Zone CA |
|---|---|---|---|---|---|---|---|---|---|---|---|---|---|---|---|
| **Fixed — with Laminated for Sound Glazing** | | | | | | | | | | | | | | | |
| 1" | Advanced Low-E IG | PEL-N-276-00139-00001 | 4 | 7 | argon | 0.27 | 0.29 | 0.55 | 59 | | | | | | |
| | with grilles-between-the-glass | PEL-N-276-00140-00001 | | | | 0.27 | 0.26 | 0.49 | 59 | | | | | | |
| 1" | Advanced Low-E IG | PEL-N-276-00151-00001 | 5 | 10 | argon | 0.26 | 0.29 | 0.54 | 57 | | | | | | |
| | with grilles-between-the-glass | PEL-N-276-00152-00001 | | | | 0.26 | 0.26 | 0.48 | 57 | | | | | | |
| 1" | SunDefense™ IG | PEL-N-276-00135-00001 | 4 | 7 | argon | 0.27 | 0.22 | 0.51 | 59 | | | SC | S | | |
| | with grilles-between-the-glass | PEL-N-276-00136-00001 | | | | 0.27 | 0.20 | 0.46 | 59 | | | SC | S | | |
| 1" | SunDefense™ IG | PEL-N-276-00147-00001 | 5 | 10 | argon | 0.26 | 0.22 | 0.50 | 58 | | | SC | S | | |
| | with grilles-between-the-glass | PEL-N-276-00148-00001 | | | | 0.26 | 0.20 | 0.45 | 58 | | | SC | S | | |
| **Fixed — with Foam insulation and Laminated for Sound Glazing** | | | | | | | | | | | | | | | |
| 1" | Advanced Low-E IG | PEL-N-276-00471-00001 | 4 | 7 | argon | 0.26 | 0.29 | 0.55 | 59 | | | | | | |
| | with grilles-between-the-glass | PEL-N-276-00472-00001 | | | | 0.26 | 0.26 | 0.49 | 59 | | | | | | |
| 1" | Advanced Low-E IG | PEL-N-276-00483-00001 | 5 | 10 | argon | 0.26 | 0.29 | 0.54 | 57 | | | | | | |
| | with grilles-between-the-glass | PEL-N-276-00484-00001 | | | | 0.26 | 0.26 | 0.48 | 57 | | | | | | |
| 1" | SunDefense™ IG | PEL-N-276-00467-00001 | 4 | 7 | argon | 0.26 | 0.22 | 0.51 | 59 | | | SC | S | | |
| | with grilles-between-the-glass | PEL-N-276-00468-00001 | | | | 0.26 | 0.20 | 0.46 | 59 | | | SC | S | | |
| 1" | SunDefense™ IG | PEL-N-276-00479-00001 | 5 | 10 | argon | 0.25 | 0.22 | 0.50 | 58 | | NC | SC | S | | |
| | with grilles-between-the-glass | PEL-N-276-00480-00001 | | | | 0.25 | 0.20 | 0.45 | 58 | | NC | SC | S | | |
| **Fixed — High Altitude Glazing — with Laminated for Sound Glazing** | | | | | | | | | | N | NC | SC | S | | CA |
| 1" | Advanced Low-E IG | PEL-N-276-00137-00001 | 4 | 7 | air | 0.31 | 0.30 | 0.55 | 55 | | | | | | |
| | with grilles-between-the-glass | PEL-N-276-00138-00001 | | | | 0.31 | 0.27 | 0.49 | 55 | | | | | | |
| 1" | Advanced Low-E IG | PEL-N-276-00149-00001 | 5 | 10 | air | 0.30 | 0.29 | 0.54 | 54 | | | | | | |
| | with grilles-between-the-glass | PEL-N-276-00150-00001 | | | | 0.30 | 0.27 | 0.48 | 54 | | | | | | |
| 1" | SunDefense IG | PEL-N-276-00133-00001 | 4 | 7 | air | 0.30 | 0.22 | 0.51 | 56 | | | | S | | |
| | with grilles-between-the-glass | PEL-N-276-00134-00001 | | | | 0.30 | 0.20 | 0.46 | 56 | | | | S | | |
| 1" | SunDefense IG | PEL-N-276-00145-00001 | 5 | 10 | air | 0.30 | 0.23 | 0.50 | 54 | | | | S | | |
| | with grilles-between-the-glass | PEL-N-276-00146-00001 | | | | 0.30 | 0.20 | 0.45 | 54 | | | | S | | |
| **Fixed — High Altitude Glazing — with Foam Insulation and Laminated for Sound Glazing** | | | | | | | | | | | | | | | |
| 1" | Advanced Low-E IG | PEL-N-276-00469-00001 | 4 | 7 | air | 0.30 | 0.30 | 0.55 | 56 | | | | | | |
| | with grilles-between-the-glass | PEL-N-276-00470-00001 | | | | 0.30 | 0.27 | 0.49 | 56 | | | | | | |
| 1" | Advanced Low-E IG | PEL-N-276-00481-00001 | 5 | 10 | air | 0.30 | 0.29 | 0.54 | 54 | | | | | | |
| | with grilles-between-the-glass | PEL-N-276-00482-00001 | | | | 0.30 | 0.27 | 0.48 | 54 | | | | | | |
| 1" | SunDefense IG | PEL-N-276-00465-00001 | 4 | 7 | air | 0.30 | 0.22 | 0.51 | 56 | | | | S | | |
| | with grilles-between-the-glass | PEL-N-276-00466-00001 | | | | 0.30 | 0.20 | 0.46 | 56 | | | | S | | |
| 1" | SunDefense IG | PEL-N-276-00477-00001 | 5 | 10 | air | 0.29 | 0.23 | 0.50 | 54 | | | | S | | |
| | with grilles-between-the-glass | PEL-N-276-00478-00001 | | | | 0.29 | 0.20 | 0.45 | 54 | | | | S | | |

R-Value = 1/U-Factor
SHGC = Solar Heat Gain Coefficient
VLT % = Visible Light Transmission
CR = Condensation Resistance
ER = Canadian Energy Rating

(1) Glazing performance values are calculated based on NFRC 100, NFRC 200 and NFRC 500.
ENERGY STAR® values are updated to 2023 (version 7) criteria.
(2) The values shown are based on Canada's updated ENERGY STAR® 2020 initiative.
For center-glass values, see the Product Performance section.
Visit www.energystar.gov for Energy Star guidelines.

**Climate Zones**

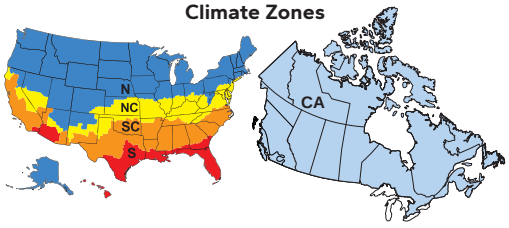

## Glazing Performance – Total Unit

| Glazing Thickness | Type of Glazing | NFRC Certified Product # | Glass (mm) Ext. | Glass (mm) Int. | Gap Fill | Performance Values[1] U-Factor | SHGC | VLT | CR | Shaded Areas Meet ENERGY STAR® Performance Criteria in Zones Shown U. S. Zone N | NC | SC | S | Canada[2] ER | Canada[2] Zone CA |
|---|---|---|---|---|---|---|---|---|---|---|---|---|---|---|---|
| **Fixed — with Impact-Resistant Laminated Glazing** | | | | | | | | | | | | | | | |
| 11/16" | Clear IG (PVB) | PEL-N-276-00665-00001 | 3 | 7.6 | air | 0.49 | 0.59 | 0.64 | 41 | | | | | | |
| | with grilles-between-the-glass | PEL-N-276-00666-00001 | | | | 0.51 | 0.53 | 0.57 | 41 | | | | | | |
| 1" | Clear IG (PVB) | PEL-N-276-00913-00001 | 3 | 8.6 | air | 0.44 | 0.59 | 0.64 | 45 | | | | | | |
| | with grilles-between-the-glass | PEL-N-276-00914-00001 | | | | 0.44 | 0.53 | 0.57 | 45 | | | | | | |
| 1" | Clear IG (SGP) | PEL-N-276-01421-00001 | 5 | 10.1 | air | 0.45 | 0.57 | 0.64 | 44 | | | | | | |
| | with grilles-between-the-glass | PEL-N-276-01422-00001 | | | | 0.45 | 0.52 | 0.57 | 44 | | | | | | |
| 11/16" | Advanced Low-E IG (PVB) | PEL-N-276-00699-00001 | 3 | 7.6 | argon | 0.32 | 0.30 | 0.55 | 54 | | | | | | |
| | with grilles-between-the-glass | PEL-N-276-00700-00001 | | | | 0.35 | 0.27 | 0.49 | 54 | | | | | | |
| 1" | Advanced Low-E IG (PVB) | PEL-N-276-00963-00001 | 3 | 8.6 | argon | 0.27 | 0.29 | 0.55 | 59 | | | | | | |
| | with grilles-between-the-glass | PEL-N-276-00964-00001 | | | | 0.27 | 0.27 | 0.49 | 59 | | | | | | |
| 1" | Advanced Low-E IG (SGP) | PEL-N-276-01455-00001 | 5 | 10.1 | argon | 0.27 | 0.29 | 0.54 | 57 | | | | | | |
| | with grilles-between-the-glass | PEL-N-276-01456-00001 | | | | 0.28 | 0.26 | 0.48 | 57 | | | | | | |
| 11/16" | SunDefense™ IG (PVB) | PEL-N-276-00683-00001 | 3 | 7.6 | argon | 0.32 | 0.23 | 0.51 | 54 | | | | S | | |
| | with grilles-between-the-glass | PEL-N-276-00684-00001 | | | | 0.35 | 0.20 | 0.45 | 54 | | | | | | |
| 1" | SunDefense™ IG (PVB) | PEL-N-276-00939-00001 | 3 | 8.6 | argon | 0.26 | 0.22 | 0.51 | 59 | | | SC | S | | |
| | with grilles-between-the-glass | PEL-N-276-00940-00001 | | | | 0.26 | 0.20 | 0.45 | 59 | | | SC | S | | |
| 1" | SunDefense™ IG (SGP) | PEL-N-276-01439-00001 | 5 | 10.1 | argon | 0.27 | 0.22 | 0.50 | 57 | | | SC | S | | |
| | with grilles-between-the-glass | PEL-N-276-01440-00001 | | | | 0.28 | 0.20 | 0.45 | 57 | | | SC | S | | |
| 11/16" | Bronze Advanced Low-E IG (PVB) | PEL-N-276-00703-00001 | 3 | 7.6 | argon | 0.32 | 0.29 | 0.40 | 54 | | | | | | |
| | with grilles-between-the-glass | PEL-N-276-00704-00001 | | | | 0.35 | 0.26 | 0.36 | 54 | | | | | | |
| 1" | Bronze Advanced Low-E IG (PVB) | PEL-N-276-00975-00001 | 3 | 8.6 | argon | 0.27 | 0.29 | 0.40 | 59 | | | | | | |
| | with grilles-between-the-glass | PEL-N-276-00976-00001 | | | | 0.27 | 0.26 | 0.36 | 59 | | | | | | |
| 1" | Bronze Advanced Low-E IG (SGP) | PEL-N-276-01459-00001 | 5 | 10.1 | argon | 0.27 | 0.28 | 0.37 | 57 | | | | | | |
| | with grilles-between-the-glass | PEL-N-276-01460-00001 | | | | 0.28 | 0.26 | 0.33 | 57 | | | | | | |
| **Fixed — with Foam Insulation and Impact-Resistant Laminated Glazing** | | | | | | | | | | | | | | | |
| 11/16" | Advanced Low-E IG (PVB) | PEL-N-276-01531-00001 | 3 | 7.6 | argon | 0.32 | 0.30 | 0.55 | 54 | | | | | | |
| | with grilles-between-the-glass | PEL-N-276-01532-00001 | | | | 0.35 | 0.27 | 0.49 | 54 | | | | | | |
| 1" | Advanced Low-E IG (PVB) | PEL-N-276-01795-00001 | 3 | 8.6 | argon | 0.27 | 0.29 | 0.55 | 59 | | | | | | |
| | with grilles-between-the-glass | PEL-N-276-01796-00001 | | | | 0.27 | 0.27 | 0.49 | 59 | | | | | | |
| 1" | Advanced Low-E IG (SGP) | PEL-N-276-02287-00001 | 5 | 10.1 | argon | 0.27 | 0.29 | 0.54 | 57 | | | | | | |
| | with grilles-between-the-glass | PEL-N-276-02288-00001 | | | | 0.28 | 0.26 | 0.48 | 57 | | | | | | |
| 11/16" | SunDefense™ IG (PVB) | PEL-N-276-01515-00001 | 3 | 7.6 | argon | 0.32 | 0.23 | 0.51 | 54 | | | | S | | |
| | with grilles-between-the-glass | PEL-N-276-01516-00001 | | | | 0.35 | 0.20 | 0.45 | 54 | | | | | | |
| 1" | SunDefense™ IG (PVB) | PEL-N-276-01771-00001 | 3 | 8.6 | argon | 0.26 | 0.22 | 0.51 | 59 | | | SC | S | | |
| | with grilles-between-the-glass | PEL-N-276-01772-00001 | | | | 0.26 | 0.20 | 0.45 | 59 | | | SC | S | | |
| 1" | SunDefense™ IG (SGP) | PEL-N-276-02271-00001 | 5 | 10.1 | argon | 0.27 | 0.22 | 0.50 | 57 | | | SC | S | | |
| | with grilles-between-the-glass | PEL-N-276-02272-00001 | | | | 0.28 | 0.20 | 0.45 | 57 | | | SC | S | | |
| 11/16" | Bronze Advanced Low-E IG (PVB) | PEL-N-276-01535-00001 | 3 | 7.6 | argon | 0.32 | 0.29 | 0.40 | 54 | | | | | | |
| | with grilles-between-the-glass | PEL-N-276-01536-00001 | | | | 0.35 | 0.26 | 0.36 | 54 | | | | | | |
| 1" | Bronze Advanced Low-E IG (PVB) | PEL-N-276-01807-00001 | 3 | 8.6 | argon | 0.26 | 0.29 | 0.40 | 59 | | | | | | |
| | with grilles-between-the-glass | PEL-N-276-01808-00001 | | | | 0.26 | 0.26 | 0.36 | 59 | | | | | | |
| 1" | Bronze Advanced Low-E IG (SGP) | PEL-N-276-02291-00001 | 5 | 10.1 | argon | 0.27 | 0.28 | 0.37 | 57 | | | | | | |
| | with grilles-between-the-glass | PEL-N-276-02292-00001 | | | | 0.28 | 0.26 | 0.33 | 57 | | | | | | |

R-Value = 1/U-Factor
SHGC = Solar Heat Gain Coefficient
VLT % = Visible Light Transmission
CR = Condensation Resistance
ER = Canadian Energy Rating

(1) Glazing performance values are calculated based on NFRC 100, NFRC 200 and NFRC 500. ENERGY STAR® values are updated to 2023 (version 7) criteria.

(2) The values shown are based on Canada's updated ENERGY STAR® 2020 initiative. For center-glass values, see the Product Performance section. Visit www.energystar.gov for Energy Star guidelines.

**Climate Zones**

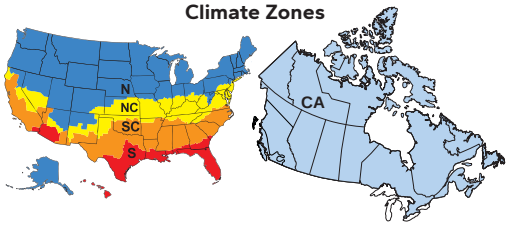

## Glazing Performance – Total Unit

| Glazing Thickness | Type of Glazing | NFRC Certified Product # | Glass (mm) Ext. | Glass (mm) Int. | Gap Fill | Performance Values[1] U-Factor | SHGC | VLT | CR | Shaded Areas Meet ENERGY STAR® Performance Criteria in Zones Shown U. S. Zone N | NC | SC | S | Canada[2] ER | Canada[2] Zone CA |
|---|---|---|---|---|---|---|---|---|---|---|---|---|---|---|---|
| **Fixed — High Altitude with Impact-Resistant Laminated Glazing** | | | | | | | | | | | | | | | |
| 11/16" | Advanced Low-E IG (PVB) | PEL-N-276-00697-00001 | 3 | 7.6 | air | 0.38 | 0.30 | 0.55 | 49 | | | | | | |
| | with grilles-between-the-glass | PEL-N-276-00698-00001 | | | | 0.41 | 0.27 | 0.49 | 49 | | | | | | |
| 1" | Advanced Low-E IG (PVB) | PEL-N-276-00961-00001 | 3 | 8.6 | air | 0.30 | 0.30 | 0.55 | 55 | | | | | | |
| | with grilles-between-the-glass | PEL-N-276-00962-00001 | | | | 0.30 | 0.27 | 0.49 | 55 | | | | | | |
| 1" | Advanced Low-E IG (SGP) | PEL-N-276-01453-00001 | 5 | 10.1 | air | 0.32 | 0.30 | 0.54 | 53 | | | | | | |
| | with grilles-between-the-glass | PEL-N-276-01454-00001 | | | | 0.33 | 0.27 | 0.48 | 53 | | | | | | |
| 11/16" | SunDefense™ IG (PVB) | PEL-N-276-00681-00001 | 3 | 7.6 | air | 0.38 | 0.23 | 0.51 | 49 | | | | | | |
| | with grilles-between-the-glass | PEL-N-276-00682-00001 | | | | 0.41 | 0.21 | 0.45 | 49 | | | | | | |
| 1" | SunDefense™ IG (PVB) | PEL-N-276-00937-00001 | 3 | 8.6 | air | 0.30 | 0.22 | 0.51 | 56 | | | | S | | |
| | with grilles-between-the-glass | PEL-N-276-00938-00001 | | | | 0.30 | 0.20 | 0.45 | 56 | | | | S | | |
| 1" | SunDefense™ IG (SGP) | PEL-N-276-01437-00001 | 5 | 10.1 | air | 0.31 | 0.23 | 0.50 | 53 | | | | S | | |
| | with grilles-between-the-glass | PEL-N-276-01438-00001 | | | | 0.33 | 0.21 | 0.45 | 53 | | | | | | |
| 11/16" | Bronze Advanced Low-E IG (PVB) | PEL-N-276-00701-00001 | 3 | 7.6 | air | 0.38 | 0.29 | 0.40 | 49 | | | | | | |
| | with grilles-between-the-glass | PEL-N-276-00702-00001 | | | | 0.41 | 0.26 | 0.36 | 49 | | | | | | |
| 1" | Bronze Advanced Low-E IG (PVB) | PEL-N-276-00973-00001 | 3 | 8.6 | air | 0.30 | 0.29 | 0.40 | 56 | | | | | | |
| | with grilles-between-the-glass | PEL-N-276-00974-00001 | | | | 0.30 | 0.26 | 0.36 | 56 | | | | | | |
| 1" | Bronze Advanced Low-E IG (SGP) | PEL-N-276-01457-00001 | 5 | 10.1 | air | 0.32 | 0.28 | 0.37 | 53 | | | | | | |
| | with grilles-between-the-glass | PEL-N-276-01458-00001 | | | | 0.33 | 0.26 | 0.33 | 53 | | | | | | |
| **Fixed — High Altitude with Foam Insulation and Impact-Resistant Laminated Glazing** | | | | | | | | | | | | | | | |
| 11/16" | Advanced Low-E IG (PVB) | PEL-N-276-01529-00001 | 3 | 7.6 | air | 0.38 | 0.30 | 0.55 | 49 | | | | | | |
| | with grilles-between-the-glass | PEL-N-276-01530-00001 | | | | 0.41 | 0.27 | 0.49 | 49 | | | | | | |
| 1" | Advanced Low-E IG (PVB) | PEL-N-276-01793-00001 | 3 | 8.6 | air | 0.30 | 0.30 | 0.55 | 55 | | | | | | |
| | with grilles-between-the-glass | PEL-N-276-01794-00001 | | | | 0.30 | 0.27 | 0.49 | 55 | | | | | | |
| 1" | Advanced Low-E IG (SGP) | PEL-N-276-02285-00001 | 5 | 10.1 | air | 0.31 | 0.30 | 0.54 | 53 | | | | | | |
| | with grilles-between-the-glass | PEL-N-276-02286-00001 | | | | 0.33 | 0.27 | 0.48 | 53 | | | | | | |
| 11/16" | SunDefense™ IG (PVB) | PEL-N-276-01513-00001 | 3 | 7.6 | air | 0.37 | 0.23 | 0.51 | 49 | | | | | | |
| | with grilles-between-the-glass | PEL-N-276-01514-00001 | | | | 0.40 | 0.21 | 0.45 | 49 | | | | | | |
| 1" | SunDefense™ IG (PVB) | PEL-N-276-01769-00001 | 3 | 8.6 | air | 0.30 | 0.22 | 0.51 | 56 | | | | S | | |
| | with grilles-between-the-glass | PEL-N-276-01770-00001 | | | | 0.30 | 0.20 | 0.45 | 56 | | | | S | | |
| 1" | SunDefense™ IG (SGP) | PEL-N-276-02269-00001 | 5 | 10.1 | air | 0.31 | 0.23 | 0.50 | 53 | | | | S | | |
| | with grilles-between-the-glass | PEL-N-276-02270-00001 | | | | 0.32 | 0.21 | 0.45 | 54 | | | | S | | |
| 11/16" | Bronze Advanced Low-E IG (PVB) | PEL-N-276-01533-00001 | 3 | 7.6 | air | 0.37 | 0.29 | 0.40 | 49 | | | | | | |
| | with grilles-between-the-glass | PEL-N-276-01534-00001 | | | | 0.40 | 0.26 | 0.36 | 49 | | | | | | |
| 1" | Bronze Advanced Low-E IG (PVB) | PEL-N-276-01805-00001 | 3 | 8.6 | air | 0.30 | 0.29 | 0.40 | 56 | | | | | | |
| | with grilles-between-the-glass | PEL-N-276-01806-00001 | | | | 0.30 | 0.26 | 0.36 | 56 | | | | | | |
| 1" | Bronze Advanced Low-E IG (SGP) | PEL-N-276-02289-00001 | 5 | 10.1 | air | 0.31 | 0.28 | 0.37 | 53 | | | | | | |
| | with grilles-between-the-glass | PEL-N-276-02290-00001 | | | | 0.33 | 0.26 | 0.33 | 53 | | | | | | |

R-Value = 1/U-Factor
SHGC = Solar Heat Gain Coefficient
VLT % = Visible Light Transmission
CR = Condensation Resistance
ER = Canadian Energy Rating

(1) Glazing performance values are calculated based on NFRC 100, NFRC 200 and NFRC 500. ENERGY STAR® values are updated to 2023 (version 7) criteria.

(2) The values shown are based on Canada's updated ENERGY STAR® 2020 initiative. For center-glass values, see the Product Performance section. Visit www.energystar.gov for Energy Star guidelines.

**Climate Zones**

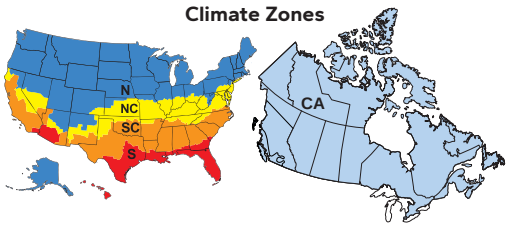

## Glazing Performance – Total Unit

| Glazing Thickness | Type of Glazing | NFRC Certified Product # | Glass (mm) | | | Gap Fill | Performance Values[1] | | | | Shaded Areas Meet ENERGY STAR® Performance Criteria in Zones Shown | | | | | |
|---|---|---|---|---|---|---|---|---|---|---|---|---|---|---|---|---|
| | | | Ext. | Middle | Int. | | U-Factor | SHGC | VLT | CR | U. S. Zone | | | | Canada[2] ER | Canada[2] Zone |
| **Fixed — Triple Pane** | | | | | | | | | | | N | NC | SC | S | | CA |
| 1" | Advanced Low-E IG | PEL-N-276-00167-00001 | 3 | 3 | 3 | argon | 0.21 | 0.27 | 0.50 | 67 | N | NC | | | 29 | CA |
| | with grilles-between-the-glass | PEL-N-276-00168-00001 | | | | | 0.22 | 0.25 | 0.44 | 67 | N | NC | | | | |
| 1" | Advanced Low-E IG | PEL-N-276-00173-00001 | 4 | 4 | 4 | argon | 0.24 | 0.27 | 0.49 | 63 | | NC | | | | |
| | with grilles-between-the-glass | PEL-N-276-00174-00001 | | | | | 0.25 | 0.24 | 0.43 | 63 | | NC | | | | |
| 1" | SunDefense™ IG | PEL-N-276-00179-00001 | 3 | 3 | 3 | argon | 0.21 | 0.20 | 0.46 | 67 | N | NC | SC | S | 25 | CA |
| | with grilles-between-the-glass | PEL-N-276-00180-00001 | | | | | 0.22 | 0.19 | 0.41 | 67 | N | NC | SC | S | | |
| 1" | SunDefense™ IG | PEL-N-276-00185-00001 | 4 | 4 | 4 | argon | 0.24 | 0.21 | 0.45 | 64 | | NC | SC | S | | |
| | with grilles-between-the-glass | PEL-N-276-00186-00001 | | | | | 0.25 | 0.19 | 0.40 | 64 | | NC | SC | S | | |
| 1" | NaturalSun Low-E IG | PEL-N-276-00155-00001 | 3 | 3 | 3 | argon | 0.22 | 0.45 | 0.56 | 67 | N | | | | 38 | CA |
| | with grilles-between-the-glass | PEL-N-276-00156-00001 | | | | | 0.22 | 0.41 | 0.50 | 67 | N | | | | 36 | CA |
| 1" | NaturalSun Low-E IG | PEL-N-276-00161-00001 | 4 | 4 | 4 | argon | 0.24 | 0.44 | 0.55 | 63 | N | | | | 35 | CA |
| | with grilles-between-the-glass | PEL-N-276-00162-00001 | | | | | 0.26 | 0.40 | 0.50 | 63 | N | | | | | |
| **Fixed — Triple Pane with Foam Insulation** | | | | | | | | | | | | | | | | |
| 1" | Advanced Low-E IG | PEL-N-276-00499-00001 | 3 | 3 | 3 | argon | 0.21 | 0.27 | 0.50 | 67 | N | NC | | | 29 | CA |
| | with grilles-between-the-glass | PEL-N-276-00500-00001 | | | | | 0.21 | 0.25 | 0.44 | 67 | N | NC | | | 28 | CA |
| 1" | Advanced Low-E IG | PEL-N-276-00505-00001 | 4 | 4 | 4 | argon | 0.23 | 0.27 | 0.49 | 64 | | NC | | | | |
| | with grilles-between-the-glass | PEL-N-276-00506-00001 | | | | | 0.25 | 0.24 | 0.43 | 64 | | NC | | | | |
| 1" | SunDefense IG | PEL-N-276-00511-00001 | 3 | 3 | 3 | argon | 0.21 | 0.20 | 0.46 | 68 | N | NC | SC | S | 25 | CA |
| | with grilles-between-the-glass | PEL-N-276-00512-00001 | | | | | 0.21 | 0.19 | 0.41 | 68 | N | NC | SC | S | 25 | CA |
| 1" | SunDefense IG | PEL-N-276-00517-00001 | 4 | 4 | 4 | argon | 0.23 | 0.21 | 0.45 | 64 | | NC | SC | S | | |
| | with grilles-between-the-glass | PEL-N-276-00518-00001 | | | | | 0.24 | 0.19 | 0.40 | 64 | | NC | SC | S | | |
| 1" | NaturalSun Low-E IG | PEL-N-276-00487-00001 | 3 | 3 | 3 | argon | 0.21 | 0.45 | 0.56 | 67 | N | | | | 40 | CA |
| | with grilles-between-the-glass | PEL-N-276-00488-00001 | | | | | 0.22 | 0.41 | 0.50 | 67 | N | | | | 36 | CA |
| 1" | NaturalSun Low-E IG | PEL-N-276-00493-00001 | 4 | 4 | 4 | argon | 0.24 | 0.44 | 0.55 | 63 | N | | | | 35 | CA |
| | with grilles-between-the-glass | PEL-N-276-00494-00001 | | | | | 0.25 | 0.40 | 0.50 | 63 | N | NC | | | | |

R-Value = 1/U-Factor
SHGC = Solar Heat Gain Coefficient
VLT % = Visible Light Transmission
CR = Condensation Resistance
ER = Canadian Energy Rating

(1) Glazing performance values are calculated based on NFRC 100, NFRC 200 and NFRC 500. ENERGY STAR® values are updated to 2023 (version 7) criteria.

(2) The values shown are based on Canada's updated ENERGY STAR® 2020 initiative. For center-glass values, see the Product Performance section. Visit www.energystar.gov for Energy Star guidelines.

**Climate Zones**

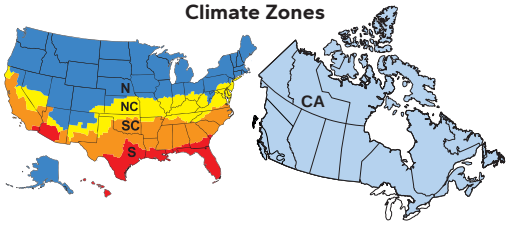

## Glazing Performance – Total Unit

| Glazing Thickness | Type of Glazing | NFRC Certified Product # | Glass (mm) | | | Gap Fill | Performance Values[1] | | | | Shaded Areas Meet ENERGY STAR® Performance Criteria in Zones Shown | | | | | |
|---|---|---|---|---|---|---|---|---|---|---|---|---|---|---|---|---|
| | | | | | | | | | | | U. S. | | | | Canada[2] | |
| | | | Ext. | Middle | Int. | | U-Factor | SHGC | VLT | CR | Zone | | | | ER | Zone |
| **Fixed — Triple Pane with High Altitude Glazing** | | | | | | | | | | | N | NC | SC | S | | CA |
| 1" | (HA) Advanced Low-E IG | PEL-N-276-00165-00001 | 3 | 3 | 3 | air | 0.25 | 0.27 | 0.50 | 63 | | NC | | | | |
| | with grilles-between-the-glass | PEL-N-276-00166-00001 | | | | | 0.26 | 0.25 | 0.44 | 63 | | | | | | |
| 1" | (HA) Advanced Low-E IG | PEL-N-276-00171-00001 | 4 | 4 | 4 | air | 0.28 | 0.27 | 0.49 | 60 | | | | | | |
| | with grilles-between-the-glass | PEL-N-276-00172-00001 | | | | | 0.30 | 0.25 | 0.43 | 60 | | | | | | |
| 1" | (HA) SunDefense IG | PEL-N-276-00177-00001 | 3 | 3 | 3 | air | 0.25 | 0.21 | 0.46 | 63 | | NC | SC | S | | |
| | with grilles-between-the-glass | PEL-N-276-00178-00001 | | | | | 0.26 | 0.19 | 0.41 | 63 | | | SC | S | | |
| 1" | (HA) SunDefense IG | PEL-N-276-00183-00001 | 4 | 4 | 4 | air | 0.28 | 0.21 | 0.45 | 60 | | | SC | S | | |
| | with grilles-between-the-glass | PEL-N-276-00184-00001 | | | | | 0.30 | 0.19 | 0.40 | 60 | | | | S | | |
| 1" | (HA) NaturalSun Low-E IG | PEL-N-276-00153-00001 | 3 | 3 | 3 | air | 0.26 | 0.45 | 0.56 | 63 | N | | | | | |
| | with grilles-between-the-glass | PEL-N-276-00154-00001 | | | | | 0.26 | 0.41 | 0.50 | 63 | N | | | | | |
| 1" | (HA) NaturalSun Low-E IG | PEL-N-276-00159-00001 | 4 | 4 | 4 | air | 0.29 | 0.44 | 0.55 | 59 | | | | | | |
| | with grilles-between-the-glass | PEL-N-276-00160-00001 | | | | | 0.30 | 0.39 | 0.50 | 59 | | | | | | |
| **Fixed — Triple Pane with High Altitude Glazing and Foam Insulation** | | | | | | | | | | | | | | | | |
| 1" | (HA) Advanced Low-E IG | PEL-N-276-00497-00001 | 3 | 3 | 3 | air | 0.25 | 0.27 | 0.50 | 63 | | NC | | | | |
| | with grilles-between-the-glass | PEL-N-276-00498-00001 | | | | | 0.25 | 0.25 | 0.44 | 63 | | NC | | | | |
| 1" | (HA) Advanced Low-E IG | PEL-N-276-00503-00001 | 4 | 4 | 4 | air | 0.28 | 0.27 | 0.49 | 60 | | | | | | |
| | with grilles-between-the-glass | PEL-N-276-00504-00001 | | | | | 0.29 | 0.25 | 0.43 | 60 | | | | | | |
| 1" | (HA) SunDefense IG | PEL-N-276-00509-00001 | 3 | 3 | 3 | air | 0.24 | 0.21 | 0.46 | 64 | | NC | SC | S | | |
| | with grilles-between-the-glass | PEL-N-276-00510-00001 | | | | | 0.25 | 0.19 | 0.41 | 64 | | | SC | S | | |
| 1" | (HA) SunDefense IG | PEL-N-276-00515-00001 | 4 | 4 | 4 | air | 0.28 | 0.21 | 0.45 | 60 | | | SC | S | | |
| | with grilles-between-the-glass | PEL-N-276-00516-00001 | | | | | 0.29 | 0.19 | 0.40 | 60 | | | | S | | |
| 1" | (HA) NaturalSun Low-E IG | PEL-N-276-00485-00001 | 3 | 3 | 3 | air | 0.25 | 0.45 | 0.56 | 63 | N | | | | 35 | CA |
| | with grilles-between-the-glass | PEL-N-276-00486-00001 | | | | | 0.26 | 0.41 | 0.50 | 63 | N | | | | | |
| 1" | (HA) NaturalSun Low-E IG | PEL-N-276-00491-00001 | 4 | 4 | 4 | air | 0.28 | 0.44 | 0.55 | 60 | | | | | | |
| | with grilles-between-the-glass | PEL-N-276-00492-00001 | | | | | 0.29 | 0.39 | 0.50 | 60 | | | | | | |

R-Value = 1/U-Factor
SHGC = Solar Heat Gain Coefficient
VLT % = Visible Light Transmission
CR = Condensation Resistance
ER = Canadian Energy Rating

(1) Glazing performance values are calculated based on NFRC 100, NFRC 200 and NFRC 500. ENERGY STAR® values are updated to 2023 (version 7) criteria.

(2) The values shown are based on Canada's updated ENERGY STAR® 2020 initiative. For center-glass values, see the Product Performance section. Visit www.energystar.gov for Energy Star guidelines.

**Climate Zones**

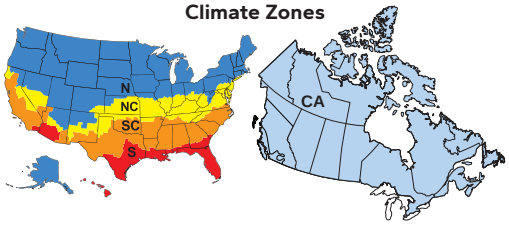

## Combinations, Grilles

A combination is defined as an assembly formed by two or more separate windows or doors whose frames are mulled together utilizing a combination mullion or reinforcing mullion.

Below are available factory-assembled combinations. See the Combination section for requirements and limitations plus configuration size range information.

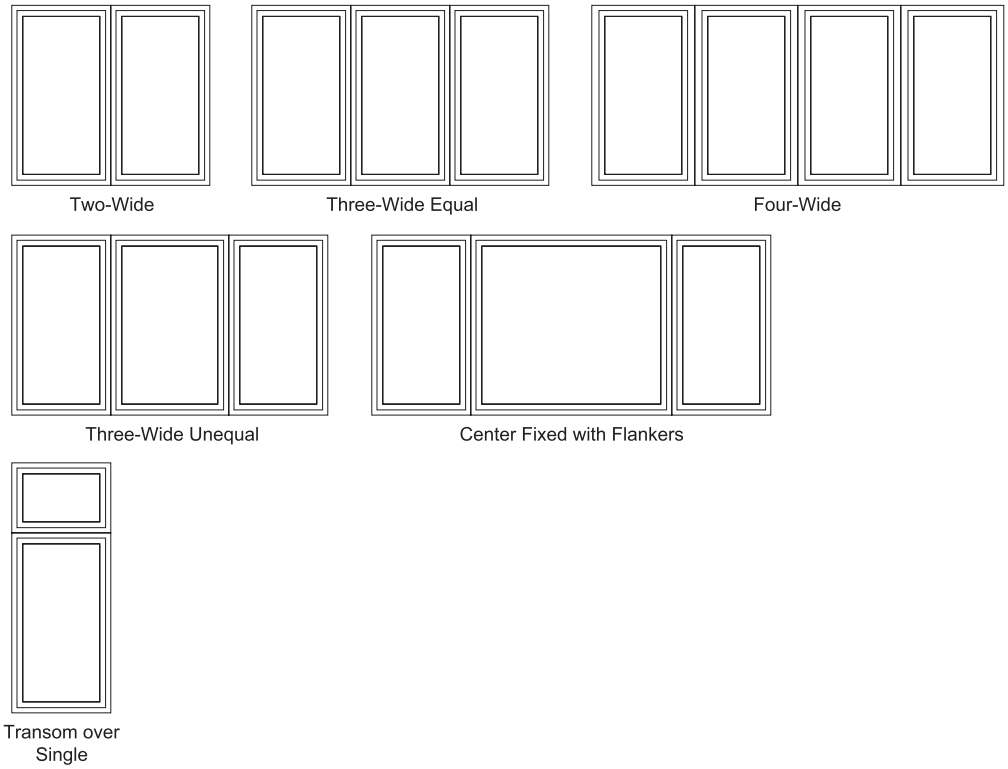


### Grille Profiles

Grilles-Between-the-Glass

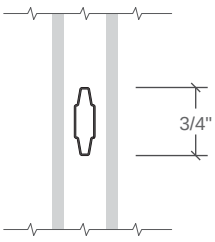


3/4" Contour

### Grille Patterns

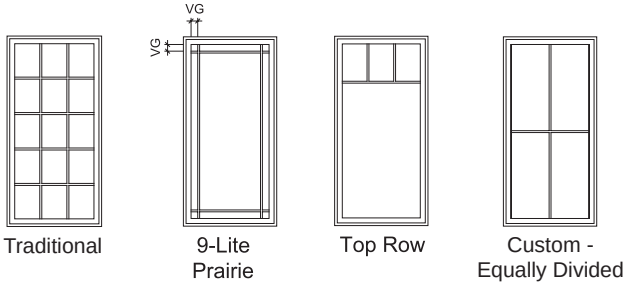


Standard corner lite dimension for Prairie patterns = 4" visible glass (VG).

(1) Standard visible glass to center line of separator bar = 14" or half the total visible glass height, whichever is smaller. Multiple rows are available up to 50% glass size.

Pattern availability may vary depending on size of unit.

VG = Visible Glass

Lite dimensions noted can vary.

## Size Tables

### Transoms

| | | | (457) (445) | (610) (597) | (711) (699) | (762) (749) | (813) (800) | (914) (902) |
|---|---|---|---|---|---|---|---|---|
| | Opening | | 1' 6" | 2' 0" | 2' 4" | 2' 6" | 2' 8" | 3' 0" |
| | Frame | | 1' 5 1/2" | 1' 11 1/2" | 2' 3 1/2" | 2' 5 1/2" | 2' 7 1/2" | 2' 11 1/2" |
| | | SPECIAL NARROWER AND WIDER SIZES AVAILABLE | | | | | | |
| (356) (343) | 1' 2" | 1' 1 1/2" | 1-6/1-2 | 2-0/1-2 | 2-4/1-2 | 2-6/1-2 | 2-8/1-2 | 3-0/1-2 |
| (457) (445) | 1' 6" | 1' 5 1/2" | 1-6/1-6 | 2-0/1-6 | 2-4/1-6 | 2-6/1-6 | 2-8/1-6 | 3-0/1-6 |
| (610) (597) | 2' 0" | 1' 11 1/2" | 1-6/2-0 | 2-0/2-0 | 2-4/2-0 | 2-6/2-0 | 2-8/2-0 | 3-0/2-0 |

SPECIAL SIZES AVAILABLE

### Vent and Fixed Units

| | | | | | | | | |
|---|---|---|---|---|---|---|---|---|
| (762) (749) | 2' 6" | 2' 5 1/2" | 1-6/2-6 | 2-0/2-6 | 2-4/2-6 | 2-6/2-6 | 2-8/2-6 | 3-0/2-6 |
| (914) (902) | 3' 0" | 2' 11 1/2" | 1-6/3-0 | 2-0/3-0 | 2-4/3-0 | 2-6/3-0 E1 | 2-8/3-0 E1 | 3-0/3-0 E |
| (1 067) (1 054) | 3' 6" | 3' 5 1/2" | 1-6/3-6 | 2-0/3-6 | 2-4/3-6 E1 | 2-6/3-6 E | 2-8/3-6 E | 3-0/3-6 E |
| (1 219) (1 207) | 4' 0" | 3' 11 1/2" | 1-6/4-0 | 2-0/4-0 | 2-4/4-0 E | 2-6/4-0 E | 2-8/4-0 E | 3-0/4-0 E |
| (1 372) (1 359) | 4' 6" | 4' 5 1/2" | 1-6/4-6 | 2-0/4-6 | 2-4/4-6 E | 2-6/4-6 E | 2-8/4-6 E | 3-0/4-6 E |
| (1 524) (1 511) | 5' 0" | 4' 11 1/2" | 1-6/5-0 | 2-0/5-0 | 2-4/5-0 E | 2-6/5-0 E | 2-8/5-0 E | 3-0/5-0 E |
| (1 676) (1 664) | 5' 6" | 5' 5 1/2" | 1-6/5-6 | 2-0/5-6 | 2-4/5-6 E | 2-6/5-6 E | 2-8/5-6 E | 3-0/5-6 E |
| (1 829) (1 816) | 6' 0" | 5' 11 1/2" | 1-6/6-0 | 2-0/6-0 | 2-4/6-0 E | 2-6/6-0 E | 3-8/6-0 E | 3-0/6-0 E |

SPECIAL SHORTER AND TALLER SIZES AVAILABLE

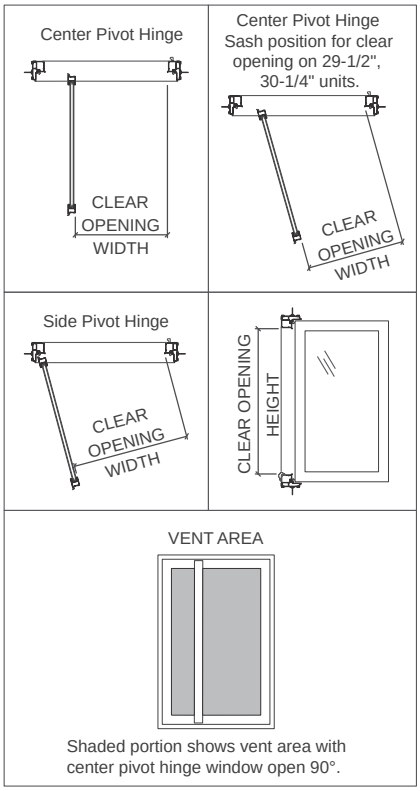


Center pivot hinge is available with crank operator only.
Crank operator with side pivot hinge available in limited siszes.
Side pivot hinge does not include wash feature.

Egress shown in size table is for Easy-Slide operator with side pivot hinge. For other product configurations see Design Data tables.

**Egress Notes:**

Check all applicable local codes for emergency egress requirements.

- E = Window meets minimum clear opening of 24" height, 20" width, and 5.7 ft².
- E1 = Window meets minimum clear opening of 24" height, 20" width, and 5.0 ft².
- E2 = With optional side pivot hardware, window meets minimum clear opening of 24" height, 20" width, and 5.7 ft².
- E3 = With optional side pivot hardware, window meets minimum clear opening of 24" height, 20" width, and 5.0 ft².

See Design Data pages in this section for clear opening dimensions.

T = Tempered glass.

Not to scale.

Any vent casement with frame height greater than 70" will have 3mm tempered glass to reduce sash weight.

All units are available as fixed in the Casement section.

Traditional grille patterns shown. See Grilles in the Overview section for additional patterns and profiles.

## Size Tables

### Transoms

| Opening | | | 4' 0" (1 219) (1 207) | 5' 0" (1 524) (1 511) | 6' 0" (1 829) (1 816) |
|---|---|---|---|---|---|
| | Frame | | 3' 11 1/2" | 4' 11 1/2" | 5' 11 1/2" |
| | | | SPECIAL NARROWER AND WIDER SIZES AVAILABLE | | |
| 2' 0" (610) (597) | 1' 11 1/2" | 1' 1 1/2" (356) (343) | 4-0/1-2 | 5-0/1-2 | 6-0/1-2 |
| 1' 6" (457) (445) | 1' 5 1/2" | | 4-0/1-6 | 5-0/1-6 | 6-0/1-6 |
| | | SPECIAL SIZES AVAILABLE | 4-0/2-0 | 5-0/2-0 | 6-0/2-0 |

### Fixed Units

| | | | | | |
|---|---|---|---|---|---|
| 3' 0" (914) (902) | 2' 11 1/2" | SPECIAL SHORTER AND TALLER SIZES AVAILABLE | 4-0/3-0 | 5-0/3-0 | 6-0/3-0 |
| 3' 6" (1 067) (1 054) | 3' 5 1/2" | | 4-0/3-6 | 5-0/3-6 | 6-0/3-6 |
| 4' 0" (1 219) (1 207) | 3' 11 1/2" | | 4-0/4-0 | 5-0/4-0 | 6-0/4-0 |
| 4' 6" (1 372) (1 359) | 4' 5 1/2" | | 4-0/4-6 | 5-0/4-6 | 6-0/4-6 |
| 5' 0" (1 524) (1 511) | 4' 11 1/2" | | 4-0/5-0 | 5-0/5-0 | 6-0/5-0 |
| 5' 6" (1 676) (1 664) | 5' 5 1/2" | | 4-0/5-6 | 5-0/5-6 | 6-0/5-6 |
| 6' 0" (1 829) (1 816) | 5' 11 1/2" | | 4-0/6-0 | 5-0/6-0 | 6-0/6-0 |

Not to scale.

Traditional grille patterns shown. See Grilles in the Overview section for additional patterns and profiles.

# Special Sizes and Dimensions

## Special Size Frame Dimensions

| | Minimum | Maximum |
|---|---|---|
| Vent | 1' 5-1/2" W x 1' 8" H<br>(17-1/2" x 20")<br>(445 x 508) | 3' 1-1/2" W x 6' 7-1/2" H<br>(37-1/2" x 79-1/2")<br>(953 x 2 019) |
| Fixed | 1' 1-1/2" W x 11-1/2" H<br>(13-1/2" x 11-1/2")<br>(343 x 292) | 5' 11-1/2" W x 6' 7-1/2" H<br>(71-1/2" x 79-1/2")<br>(1 816 x 2 019) |

Available within size range shown.
Keep frame dimensions to the nearest 1/8" increment. Frame width cannot exceed frame height on special size vent units.

Vent Sizes

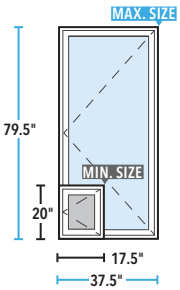


Fixed Sizes

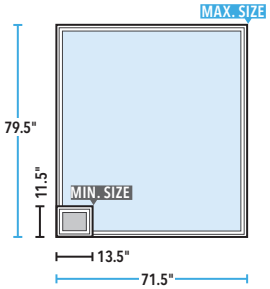


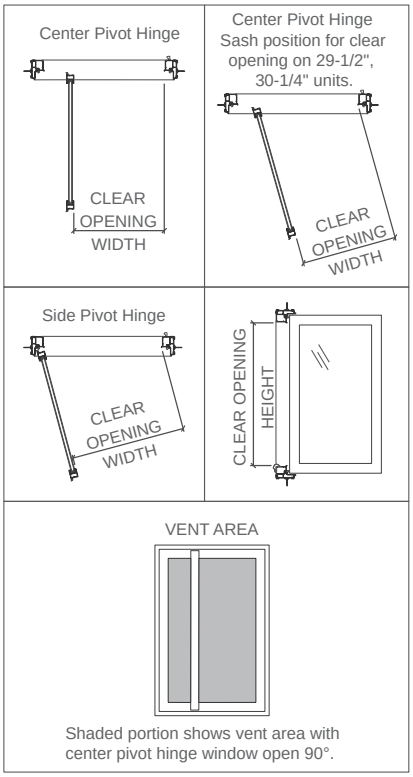


Center pivot hinge is available with crank operator only.
Crank operator with side pivot hinge available in limited sizes.
Side pivot hinge does not include wash feature.

## Miscellaneous Formulas

| | Formula |
|---|---|
| Visible Glass | Width = Frame – 5-7/16"<br>Height = Frame – 5-7/16" |
| Actual Glass | Width = Frame – 4-3/8"<br>Height = Frame – 4-3/8" |

### Clear Opening Height

Frame Height – 4-3/4"

### Clear Opening Width

| Hinge | Frame Width | Formula | Angle |
|---|---|---|---|
| Fold-away crank with wash hinge | 29-1/2" to <30-1/4" | FW – 9-1/2" | 75° |
| Fold-away crank with wash hinge | 30-1/4" to 37-1/2" | FW – 10-1/4" | 90° |
| Fold-away crank with side pivot hinge | 25-1/2" to 32" | FW – 5-1/2" | 75° |
| Easy-Slide operator with side pivot hinge | 25-1/2" to 37-1/2" | FW – 5-1/2" | 75°<br>See chart |
| Easy-Slide operator with side pivot hinge | 30" to 37-1/2" | FW x 0.67 | 54°<br>See chart |

Vent Opening Area = ((Clear Opening Width) × (Clear Opening Height)) ÷ 144

## Lock Handle Operator Height

| Frame Height | Standard Locked Location (A) | Standard Unlocked Location (B) | Accessibility Locked Location (A) | Accessibility Unlocked Location (B) |
|---|---|---|---|---|
| ≥ 20" to ≤ 59.5" | 4-5/8" | 9-3/8" | 2-1/2" | 9-7/8" |
| > 59.5" to < 72.5" | 9-5/8" | 14-3/8" | 7-1/2" | 14-7/8" |
| ≥ 72.5" to ≤ 79.5" | 30-9/16" | 35-5/16" | — | — |

## Easy-Slide Operator Height

| Frame Height | Closed Location (C) | Open Location (D)* |
|---|---|---|
| ≥ 20" to < 30.5" | 5-1/2" | 15-1/2" |
| ≥ 30.5" to < 72.5" | 5-1/2" | 25-1/2" |
| ≥ 72.5" to ≤ 79.5" | 21-1/2" | 41-1/2" |

Height is measured from the bottom of the frame, proper installation height is required for ADA compliance. Review Local and Federal requirements for guidance on install height and other considerations to meet ADA compliance.

*Limited Opening Limited Travel and Window Opening Control Device Hardware will reduce the open location by 5"

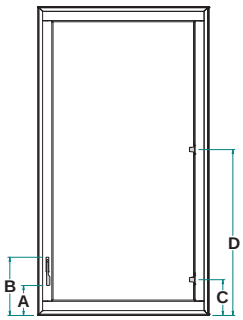

Standard Lock Lever

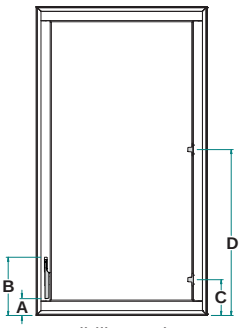

Accessibility Lock Lever

**Egress Notes:**

Check all applicable local codes for emergency egress requirements.

- E = Window meets minimum clear opening of 24" height, 20" width, and 5.7 ft².
- E1 = Window meets minimum clear opening of 24" height, 20" width, and 5.0 ft².
- E2 = With optional side pivot hardware, window meets minimum clear opening of 24" height, 20" width, and 5.7 ft².
- E3 = With optional side pivot hardware, window meets minimum clear opening of 24" height, 20" width, and 5.0 ft².

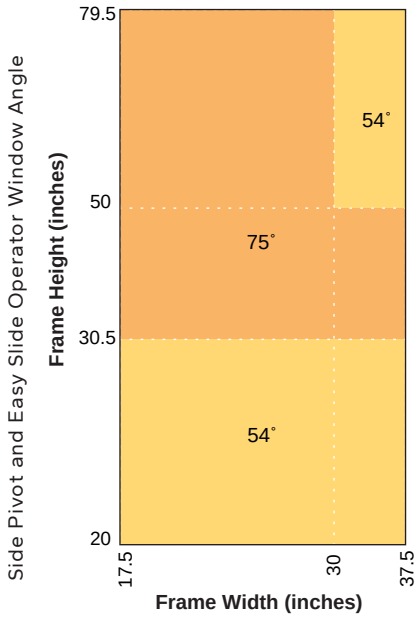

Impact-resistant laminated glass will only be available on Block Frame with a Prep for Screw Through Frame or Installation Clips attachment methods. See FPAS documents or Pella Installation Instructions for required anchor layout and details.
All hardware types including Easy-Slide operator are qualified for the sizes and performance shown.

## Impact-Resistant Special Size Frame Dimensions

| | Minimum | Maximum PVB | Maximum SGP |
|---|---|---|---|
| Vent | 1' 5-1/2" W x 1' 8" H<br>(17-1/2" x 20")<br>(445 x 508) | 2' 11-1/2" W x 6' 1-1/2" H<br>(35-1/2" x 73-1/2")<br>(902 x 1 867) | NA |
| Fixed | 1' 1-1/2" W x 11-1/2" H<br>(13-1/2" x 11-1/2")<br>(343 x 292) | 2' 11-1/2" W x 6' 1-1/2" H<br>(35-1/2" x 73-1/2")<br>(902 x 1 867) | 4' 8-1/2" W x 6' 1-1/2" H<br>(56-1/2" x 73-1/2")<br>(1 435 x 1 867) |

Available within size range shown.
Keep frame dimensions to the nearest 1/8" increment. Frame width cannot exceed frame height on special size vent units.

| Vent - Casement | | | | | | | | |
|---|---|---|---|---|---|---|---|---|
| Insulated Glass 11/16" PVB | | | Insulated Glass 1" SGP | | | Insulated Glass 1" PVB | | |
| Design Pressure | FPAS / TDI | Hallmark Certified | Design Pressure | FPAS / TDI | Hallmark Certified | Design Pressure | FPAS / TDI | Hallmark Certified |
| +50 / -50 | FL 35278 | 411-H-1510 | +50 / -50 | Pending | Pending | +50 / -50 | FL 35278 | 411-H-1510 |
| **Fixed - Casement** | | | | | | | | |
| +50 / -50 | FL 35284 | 411-H-1512 | +50 / -50 | FL 35284 | 411-H-1512 | +50 / -50 | FL 35284 | 411-H-1512 |

All vent sizes and glass types are tested for air/water/structural and impact-resistance, and are certified for wind zone 2, large missile rating C (Non-HVHZ).

## Vent

| Unit | Easy-Slide operator with side pivot hinge | | | | | | Fold-Away Crank with Wash Hinge | | | | | | Fold-Away Crank with Side Pivot Hinge | | | | | | Visible Glass Ft² | Standard Glass Thickness (mm) | | Performance Class & Grade |
|---|---|---|---|---|---|---|---|---|---|---|---|---|---|---|---|---|---|---|---|---|---|---|
| | Egress | Clear Opening | | | | Vent Area Ft² | Egress | Clear Opening | | | | Vent Area Ft² | Egress | Clear Opening | | | | Vent Area Ft² | | Annealed | Tempered | |
| | | Width (Inches) | Max Angle Opening | Height (Inches) | Ft² | | | Width (Inches) | Max Angle Opening | Height (Inches) | Ft² | | | Width (Inches) | Max Angle Opening | Height (Inches) | Ft² | | | | | |
| 1-6/2-6 | | 11-23/32 | 54° | 24-3/4 | 2.0 | 2.0 | | 7-1/4 | 90° | 24-3/4 | 1.2 | 1.7 | | — | — | — | — | — | 2.0 | 3 | 3 | LC+50/-60 |
| 1-6/3-0 | | 12 | 75° | 30-3/4 | 2.6 | 2.6 | | 7-1/4 | 90° | 30-3/4 | 1.5 | 2.1 | | — | — | — | — | — | 2.5 | 3 | 3 | LC+50/-60 |
| 1-6/3-6 | | 12 | 75° | 36-3/4 | 3.1 | 3.1 | | 7-1/4 | 90° | 36-3/4 | 1.9 | 2.5 | | — | — | — | — | — | 3.0 | 3 | 3 | LC+50/-60 |
| 1-6/4-0 | | 12 | 75° | 42-3/4 | 3.6 | 3.6 | | 7-1/4 | 90° | 42-3/4 | 2.2 | 2.9 | | — | — | — | — | — | 3.5 | 3 | 3 | LC+50/-60 |
| 1-6/4-6 | | 12 | 75° | 48-3/4 | 4.1 | 4.1 | | 7-1/4 | 90° | 48-3/4 | 2.5 | 3.3 | | — | — | — | — | — | 4.0 | 3 | 3 | LC+50/-60 |
| 1-6/5-0 | | 12 | 75° | 54-3/4 | 4.6 | 4.6 | | 7-1/4 | 90° | 54-3/4 | 2.8 | 3.8 | | — | — | — | — | — | 4.5 | 3 | 3 | LC+50/-60 |
| 1-6/5-6 | | 12 | 75° | 60-3/4 | 5.1 | 5.1 | | 7-1/4 | 90° | 60-3/4 | 3.1 | 4.2 | | — | — | — | — | — | 5.0 | 3 | 3 | LC50 |
| 1-6/6-0 T | | 12 | 75° | 66-3/4 | 5.6 | 5.6 | | 7-1/4 | 90° | 66-3/4 | 3.4 | 4.6 | | — | — | — | — | — | 5.5 | — | 3 | LC50 |
| 2-0/2-6 | | 15-3/4 | 54° | 24-3/4 | 2.7 | 2.7 | | 13-1/4 | 90° | 24-3/4 | 2.3 | 2.6 | | — | — | — | — | — | 3.0 | 3 | 3 | LC+50/-60 |
| 2-0/3-0 | | 18 | 75° | 30-3/4 | 3.8 | 3.8 | | 13-1/4 | 90° | 30-3/4 | 2.8 | 3.3 | | — | — | — | — | — | 3.7 | 3 | 3 | LC+50/-60 |
| 2-0/3-6 | | 18 | 75° | 36-3/4 | 4.6 | 4.6 | | 13-1/4 | 90° | 36-3/4 | 3.4 | 4.0 | | — | — | — | — | — | 4.5 | 3 | 3 | LC+50/-60 |
| 2-0/4-0 | | 18 | 75° | 42-3/4 | 5.3 | 5.3 | | 13-1/4 | 90° | 42-3/4 | 3.9 | 4.6 | | — | — | — | — | — | 5.2 | 3 | 3 | LC+50/-60 |
| 2-0/4-6 | | 18 | 75° | 48-3/4 | 6.1 | 6.1 | | 13-1/4 | 90° | 48-3/4 | 4.5 | 5.3 | | — | — | — | — | — | 6.0 | 3 | 3 | LC+50/-60 |
| 2-0/5-0 | | 18 | 75° | 54-3/4 | 6.8 | 6.8 | | 13-1/4 | 90° | 54-3/4 | 5.0 | 6.0 | | — | — | — | — | — | 6.7 | 3 | 3 | LC+50/-60 |
| 2-0/5-6 | | 18 | 75° | 60-3/4 | 7.6 | 7.6 | | 13-1/4 | 90° | 60-3/4 | 5.6 | 6.7 | | — | — | — | — | — | 7.5 | 3 | 3 | LC50 |
| 2-0/6-0 | | 18 | 75° | 66-3/4 | 8.3 | 8.3 | | 13-1/4 | 90° | 66-3/4 | 6.1 | 7.3 | | — | — | — | — | — | 8.2 | 3 | 3 | LC50 |
| 2-4/2-6 | | 18-7/16 | 54° | 24-3/4 | 3.2 | 3.2 | | 17-1/4 | 90° | 24-3/4 | 3.0 | 3.3 | | 22 | 75° | — | 3.8 | 3.8 | 3.6 | 3 | 3 | LC+50/-60 |
| 2-4/3-0 | | 22 | 75° | 30-3/4 | 4.7 | 4.7 | | 17-1/4 | 90° | 30-3/4 | 3.7 | 4.1 | | 22 | 75° | — | 4.7 | 4.7 | 4.6 | 3 | 3 | LC+50/-60 |
| 2-4/3-6 | E1 | 22 | 75° | 36-3/4 | 5.6 | 5.6 | | 17-1/4 | 90° | 36-3/4 | 4.4 | 5.0 | E3 | 22 | 75° | — | 5.6 | 5.6 | 5.5 | 3 | 3 | LC+50/-60 |
| 2-4/4-0 | E | 22 | 75° | 42-3/4 | 6.5 | 6.5 | | 17-1/4 | 90° | 42-3/4 | 5.1 | 5.8 | E2 | 22 | 75° | — | 6.5 | 6.5 | 6.4 | 3 | 3 | LC+50/-60 |
| 2-4/4-6 | E | 22 | 75° | 48-3/4 | 7.4 | 7.4 | | 17-1/4 | 90° | 48-3/4 | 5.8 | 6.6 | E2 | 22 | 75° | — | 7.4 | 7.4 | 7.3 | 3 | 3 | LC+50/-60 |
| 2-4/5-0 | E | 22 | 75° | 54-3/4 | 8.4 | 8.4 | | 17-1/4 | 90° | 54-3/4 | 6.6 | 7.5 | E2 | 22 | 75° | — | 8.4 | 8.4 | 8.2 | 3 | 3 | LC+50/-60 |
| 2-4/5-6 | E | 22 | 75° | 60-3/4 | 9.3 | 9.3 | | 17-1/4 | 90° | 60-3/4 | 7.3 | 8.3 | E2 | 22 | 75° | — | 9.3 | 9.3 | 9.1 | 3 | 3 | LC50 |
| 2-4/6-0 | E | 22 | 75° | 66-3/4 | 10.2 | 10.2 | | 17-1/4 | 90° | 66-3/4 | 8.0 | 9.1 | E2 | 22 | 75° | — | 10.2 | 10.2 | 10.1 | 4 | 3 | LC50 |
| 2-6/2-6 | | 19-3/4 | 54° | 24-3/4 | 3.4 | 3.4 | | 20 | 75° | 24-3/4 | 3.4 | 3.6 | | 24 | 75° | — | 4.1 | 4.1 | 4.0 | 3 | 3 | LC+50/-60 |
| 2-6/3-0 | E1 | 24 | 75° | 30-3/4 | 5.1 | 5.1 | | 20 | 75° | 30-3/4 | 4.3 | 4.5 | E3 | 24 | 75° | — | 5.1 | 5.1 | 5.0 | 3 | 3 | LC+50/-60 |
| 2-6/3-6 | E | 24 | 75° | 36-3/4 | 6.1 | 6.1 | E1 | 20 | 75° | 36-3/4 | 5.1 | 5.5 | E2 | 24 | 75° | — | 6.1 | 6.1 | 6.0 | 3 | 3 | LC+50/-60 |
| 2-6/4-0 | E | 24 | 75° | 42-3/4 | 7.1 | 7.1 | E | 20 | 75° | 42-3/4 | 5.9 | 6.4 | E2 | 24 | 75° | — | 7.1 | 7.1 | 7.0 | 3 | 3 | LC+50/-60 |
| 2-6/4-6 | E | 24 | 75° | 48-3/4 | 8.1 | 8.1 | E | 20 | 75° | 48-3/4 | 6.8 | 7.3 | E2 | 24 | 75° | — | 8.1 | 8.1 | 8.0 | 3 | 3 | LC+50/-60 |
| 2-6/5-0 | E | 24 | 75° | 54-3/4 | 9.1 | 9.1 | E | 20 | 75° | 54-3/4 | 7.6 | 8.2 | E2 | 24 | 75° | — | 9.1 | 9.1 | 9.0 | 3 | 3 | LC+50/-60 |
| 2-6/5-6 | E | 24 | 75° | 60-3/4 | 10.1 | 10.1 | E | 20 | 75° | 60-3/4 | 8.4 | 9.1 | E2 | 24 | 75° | — | 10.1 | 10.1 | 10.0 | 3 | 3 | LC50 |
| 2-6/6-0 | E | 24 | 75° | 66-3/4 | 11.1 | 11.1 | E | 20 | 75° | 66-3/4 | 9.3 | 10.1 | E2 | 24 | 75° | — | 11.1 | 11.1 | 11.0 | 4 | 3 | LC50 |
| 2-8/2-6 | | 21-3/32 | 54° | 24-3/4 | 3.6 | 3.6 | | 21-1/4 | 90° | 24-3/4 | 3.7 | 3.9 | | 26 | 75° | — | 4.5 | 4.5 | 4.3 | 3 | 3 | LC+50/-60 |
| 2-8/3-0 | E1 | 26 | 75° | 30-3/4 | 5.6 | 5.6 | | 21-1/4 | 90° | 30-3/4 | 4.5 | 4.9 | E3 | 26 | 75° | — | 5.6 | 5.6 | 5.4 | 3 | 3 | LC+50/-60 |
| 2-8/3-6 | E | 26 | 75° | 36-3/4 | 6.6 | 6.6 | E1 | 21-1/4 | 90° | 36-3/4 | 5.4 | 5.9 | E2 | 26 | 75° | — | 6.6 | 6.6 | 6.5 | 3 | 3 | LC+50/-60 |
| 2-8/4-0 | E | 26 | 75° | 42-3/4 | 7.7 | 7.7 | E | 21-1/4 | 90° | 42-3/4 | 6.3 | 7.0 | E2 | 26 | 75° | — | 7.7 | 7.7 | 7.6 | 3 | 3 | LC+50/-60 |
| 2-8/4-6 | E | 21-3/32 | 54° | 48-3/4 | 7.1 | 7.1 | E | 21-1/4 | 90° | 48-3/4 | 7.2 | 8.0 | E2 | 26 | 75° | — | 8.8 | 8.8 | 8.6 | 3 | 3 | LC+50/-60 |
| 2-8/5-0 | E | 21-3/32 | 54° | 54-3/4 | 8.0 | 8.0 | E | 21-1/4 | 90° | 54-3/4 | 8.1 | 9.0 | E2 | 26 | 75° | — | 9.9 | 9.9 | 9.7 | 3 | 3 | LC+50/-60 |
| 2-8/5-6 | E | 21-3/32 | 54° | 60-3/4 | 8.9 | 8.9 | E | 21-1/4 | 90° | 60-3/4 | 9.0 | 10.0 | E2 | 26 | 75° | — | 11.0 | 11.0 | 10.8 | 3 | 3 | LC50 |
| 2-8/6-0 | E | 21-3/32 | 54° | 66-3/4 | 9.8 | 9.8 | E | 21-1/4 | 90° | 66-3/4 | 9.9 | 11.0 | E2 | 26 | 75° | — | 12.1 | 12.1 | 11.9 | 4 | 3 | LC50 |
| 3-0/2-6 | | 23-25/32 | 54° | 24-3/4 | 4.1 | 4.1 | | 25-1/4 | 90° | 24-3/4 | 4.3 | 4.6 | | — | — | — | — | — | 5.0 | 3 | 3 | LC+50/-60 |
| 3-0/3-0 | E | 30 | 75° | 30-3/4 | 6.4 | 6.4 | E1 | 25-1/4 | 90° | 30-3/4 | 5.4 | 5.8 | | — | — | — | — | — | 6.2 | 3 | 3 | LC+50/-60 |
| 3-0/3-6 | E | 30 | 75° | 36-3/4 | 7.7 | 7.7 | E | 25-1/4 | 90° | 36-3/4 | 6.4 | 6.9 | | — | — | — | — | — | 7.5 | 3 | 3 | LC+50/-60 |
| 3-0/4-0 | E | 30 | 75° | 42-3/4 | 8.9 | 8.9 | E | 25-1/4 | 90° | 42-3/4 | 7.5 | 8.1 | | — | — | — | — | — | 8.7 | 3 | 3 | LC+50/-60 |
| 3-0/4-6 | E | 23-25/32 | 54° | 48-3/4 | 8.1 | 8.1 | E | 25-1/4 | 90° | 48-3/4 | 8.5 | 9.3 | | — | — | — | — | — | 10.0 | 3 | 3 | LC+50/-60 |
| 3-0/5-0 | E | 23-25/32 | 54° | 54-3/4 | 9.0 | 9.0 | E | 25-1/4 | 90° | 54-3/4 | 9.6 | 10.4 | | — | — | — | — | — | 11.2 | 3 | 3 | LC+50/-60 |
| 3-0/5-6 | E | 23-25/32 | 54° | 60-3/4 | 10.0 | 10.0 | E | 25-1/4 | 90° | 60-3/4 | 10.7 | 11.6 | | — | — | — | — | — | 12.5 | 3 | 3 | LC50 |
| 3-0/6-0 | E | 23-25/32 | 54° | 66-3/4 | 11.0 | 11.0 | E | 25-1/4 | 90° | 66-3/4 | 11.7 | 12.8 | | — | — | — | — | — | 13.7 | 4 | 3 | LC50 |

(1) Maximum performance when glazed with the appropriate glass thickness. Second value, where shown, requires tempered glass.

To convert areas to square meters ($m^2$), multiply square feet by 0.0929.

## Transom Units

| Unit | Visible Glass Ft² | Standard Glass Thickness (mm) | | Performance Class & Grade (1) |
|---|---|---|---|---|
| | | Annealed | Tempered | |
| 1-6/1-2 | 0.6 | 3 | 3 | LC+50/-60 |
| 1-6/1-6 | 1.0 | 3 | 3 | LC+50/-60 |
| 1-6/2-0 | 1.5 | 3 | 3 | LC+50/-60 |
| 2-0/1-2 | 1.0 | 3 | 3 | LC+50/-60 |
| 2-0/1-6 | 1.5 | 3 | 3 | LC+50/-60 |
| 2-0/2-0 | 2.2 | 3 | 3 | LC+50/-60 |
| 2-4/1-2 | 1.2 | 3 | 3 | LC+50/-60 |
| 2-4/1-6 | 1.8 | 3 | 3 | LC+50/-60 |
| 2-4/2-0 | 2.7 | 3 | 3 | LC+50/-60 |
| 2-6/1-2 | 1.3 | 3 | 3 | LC+50/-60 |
| 2-6/1-6 | 2.0 | 3 | 3 | LC+50/-60 |
| 2-6/2-0 | 3.0 | 3 | 3 | LC+50/-60 |
| 2-8/1-2 | 1.4 | 3 | 3 | LC+50/-60 |
| 2-8/1-6 | 2.1 | 3 | 3 | LC+50/-60 |
| 2-8/2-0 | 3.2 | 3 | 3 | LC+50/-60 |
| 3-0/1-2 | 1.6 | 3 | 3 | LC+50/-60 |
| 3-0/1-6 | 2.5 | 3 | 3 | LC+50/-60 |
| 3-0/2-0 | 3.7 | 3 | 3 | LC+50/-60 |
| 4-0/1-2 | 2.3 | 3 | 3 | LC+50/-60 |
| 4-0/1-6 | 3.5 | 3 | 3 | LC+50/-60 |
| 4-0/2-0 | 5.2 | 3 | 3 | LC+50/-60 |
| 5-0/1-2 T | 3.0 | — | 3 | LC+50/-60 |
| 5-0/1-6 | 4.5 | 3 | 3 | LC+50/-60 |
| 5-0/2-0 | 6.7 | 3 | 3 | LC+50/-60 |
| 6-0/1-2 T | 3.6 | — | 3 | LC45 |
| 6-0/1-6 T | 5.5 | — | 3 | LC45 |
| 6-0/2-0 | 8.2 | 3 | 3 | LC45 |

## Fixed Units

| Unit | Visible Glass Ft² | Standard Glass Thickness (mm) | | Performance Class & Grade (1) |
|---|---|---|---|---|
| | | Annealed | Tempered | |
| 3-0/3-0 | 6.2 | 3 | 3 | LC+50/-60 |
| 3-0/3-6 | 7.5 | 3 | 3 | LC+50/-60 |
| 3-0/4-0 | 8.7 | 3 | 3 | LC+50/-60 |
| 3-0/4-6 | 10.0 | 3 | 3 | LC+50/-60 |
| 3-0/5-0 | 11.2 | 3 | 3 | LC+50/-60 |
| 3-0/5-6 | 12.5 | 3 | 3 | LC50 |
| 3-0/6-0 | 13.7 | 3 | 3 | LC45/LC50 |
| 4-0/3-0 | 8.7 | 3 | 3 | LC+50/-60 |
| 4-0/3-6 | 10.5 | 3 | 3 | LC+50/-60 |
| 4-0/4-0 | 12.2 | 3 | 3 | LC+50/-60 |
| 4-0/4-6 | 14.0 | 3 | 3 | LC50/LC-60 |
| 4-0/5-0 | 15.7 | 3 | 3 | LC45/LC50/LC-60 |
| 4-0/5-6 | 17.5 | 4 | 4 | LC50 |
| 4-0/6-0 | 19.2 | 4 | 4 | LC50 |
| 5-0/3-0 | 11.2 | 3 | 3 | LC+50/-60 |
| 5-0/3-6 | 13.5 | 3 | 3 | LC50/LC-60 |
| 5-0/4-0 | 15.7 | 3 | 3 | LC45/LC50/LC-60 |
| 5-0/4-6 | 18.0 | 4 | 4 | LC+50/-60 |
| 5-0/5-0 | 20.2 | 4 | 5 | LC50/LC-60 |
| 5-0/5-6 | 22.5 | 4 | 5 | LC50 |
| 5-0/6-0 | 24.7 | 5 | 5 | LC50 |
| 6-0/3-0 | 13.7 | 3 | 3 | LC45 |
| 6-0/3-6 | 16.5 | 3 | 3 | LC45 |
| 6-0/4-0 | 19.2 | 4 | 4 | LC45 |
| 6-0/4-6 | 22.0 | 4 | 4 | LC45 |
| 6-0/5-0 | 24.7 | 4 | 5 | LC45 |
| 6-0/5-6 | 27.5 | 5 | 5 | LC45 |
| 6-0/6-0 | 30.2 | 5 | 6 | LC45 |

(1) Maximum performance when glazed with the appropriate glass thickness. Second value, where shown, requires tempered glass.

To convert areas to square meters (m²), multiply square feet by 0.0929.

# Detailed Product Description

## Frame

- Frame is Duracast—five-layer pultruded fiberglass material [with optional foam insulation[1]] reinforced with a Pella patented interlocking mat.
- Overall frame depth is 3-1/4".
- Nominal wall thickness of Duracast® fiberglass composite members is .050" to .090" thick.
- Frame corners are mitered, joined and bonded with corner lock and injected with sealant.
- Jambs contain factory-drilled installation screw holes on block frame.
- Optional factory-applied jamb extensions available in 4-9/16" and 6-9/16".

## Sash

- Sash is Duracast fiberglass composite — five-layer pultruded fiberglass material, reinforced with a Pella patented interlocking mat.
- All sash members have mitered corners bonded with corner lock and sealed with injected sealant.

## Exterior / Interior

- Frame Interior cover made from a proprietary blend of mineral filled polyvinyl chloride (PVC) with an acrylic cap that matches the interior color of the product.
- Duracast fiberglass composite surfaces with powder-coat paint finish.
  - Color is [White] [Brown] [Black] [Tan] [Morning Sky Gray].

  - or -

  - Dual-color option [Brown] [Black] [Tan] [Morning Sky Gray] exterior with White interior[2].

## Glazing System

- Quality float glass complying with ASTM C 1036.
- 11/16" insulating glass [[annealed] [tempered]] [obscure[3]] [[clear] [Advanced] [SunDefense™] [SunDefense+] [AdvancedComfort] [NaturalSun] [NaturalSun+] Low-E coated, with argon]] sealed and bonded to sash.

– or –

- 1" Triple-pane insulating glass [annealed] [tempered] [obscure[3]] [clear] [[Advanced] [SunDefense™] [AdvancedComfort] [NaturalSun] Low-E coated, [with argon]]] [[bronze] [gray] [green] Advanced Low-E [with Argon]] sealed and bonded to sash.
- High altitude glazing available.

– or –

## Impact-Resistant

- Silicone-glazed 1" dual-seal impact-resistant insulating glass [SGP] [PVB]. [[tempered] [annealed]] exterior light is [[Advanced Low-E] [SunDefense] [clear] [bronze]]. Laminated clear interior light.

– or –

- Silicone-glazed 11/16" dual-seal impact-resistant insulating glass PVB. [[tempered] [annealed]] exterior light is [[Advanced Low-E] [SunDefense] [clear]]. Laminated [clear] interior light, or [[tempered] [annealed]] exterior light is [multi-layer Low-E]. Laminated [bronze] interior light.

## Dual Weatherstripping

- Continuous, flexible ThermoPlastic Vulcanizate material in dual durometer design, compressed between frame and sash for positive seal on all four sides.
- Secondary ThermoPlastic Vulcanizate leaf-type weatherstrip between edge of sash and frame.

## Foam Insulation Inserts[1]

## Hardware

- Easy-Slide operator assembly
  - Hardened, nickel-coated Steel worm and wheel gears.
  - Zinc-magnesium alloy hob and gearbox with corrosion-protecting ultra-clear finish.
  - 5 ball bearings.
  - Stainless steel swing arm and hinge pin for extra corrosion protection of exposed components.
  - Kevlar-reinforced drive belt.
  - Harsh environment approved – ASTM B 117 salt chamber and debris cycling, 20,000 life cycle test approved.
- Optional Easy-Slide operator with Accessibility Lock Lever assembly.
  - 6" elongated lock lever.
  - 5lb operational forces available on sizes when FW is ≤ 35" and FH is ≤ 72.5" or FW > 35" but ≤ 36" and FH ≤ 60".

  – or –

- Roto operator assembly
  - Steel worm gear sash operator with hardened gears.
  - Operator base is zinc die cast with painted finish.
  - Operator linkage, hinge slide, and hinge arms are 300 series stainless steel.
  - Exposed fasteners are stainless steel.
  - Hardware shall exceed 1,000 hours salt spray exposure per ASTM B 117.
- Finish of integrated folding crank is [baked enamel [White] [Brown] [Tan] [Matte Black] [Morning Sky Gray]] [Satin Nickel (Roto operator only)]. All vent units are available with left- or right-hand hinging.
- Unison Locking System—A single handle locking system operates positive-acting arms that reach out and pull the sash into a locked position: one installed on units 27-1/2" and smaller frame height, two unison operating locks installed on units over 27-1/2" frame height, three unison operating locks over 72-1/2".
- Lock handle finish is [baked enamel [White] [Brown] [Matte Black] [Tan] [Morning Sky Gray]] [Satin Nickel (Roto operator only)].

## Optional Products

**Screens**

- InView™ screens
  - Vinyl-coated 18/18 mesh fiberglass screen cloth complying with SMA 1201, set in aluminum frame fitted to inside of window, supplied complete with all necessary hardware.
  - Screen frame finish is baked enamel, color to match interior.

**Grilles**

- Grilles-Between-the-Glass
  - Insulating glass contains 3/4" contoured aluminum grilles permanently installed between two panes of glass.
  - Grilles are factory prefinished [White] [Brown] [Black] [Tan] [Morning Sky Gray] to match interior and exterior finish

**Hardware**

- Optional factory applied limited opening hardware available for vent units in stainless steel; nominal 3" opening.
- Optional window opening control device available for field installation. Device allows window to open less than 4" with normal operation, with a release mechanism that allows the sash to open completely. Complies with ASTM F2090-10.

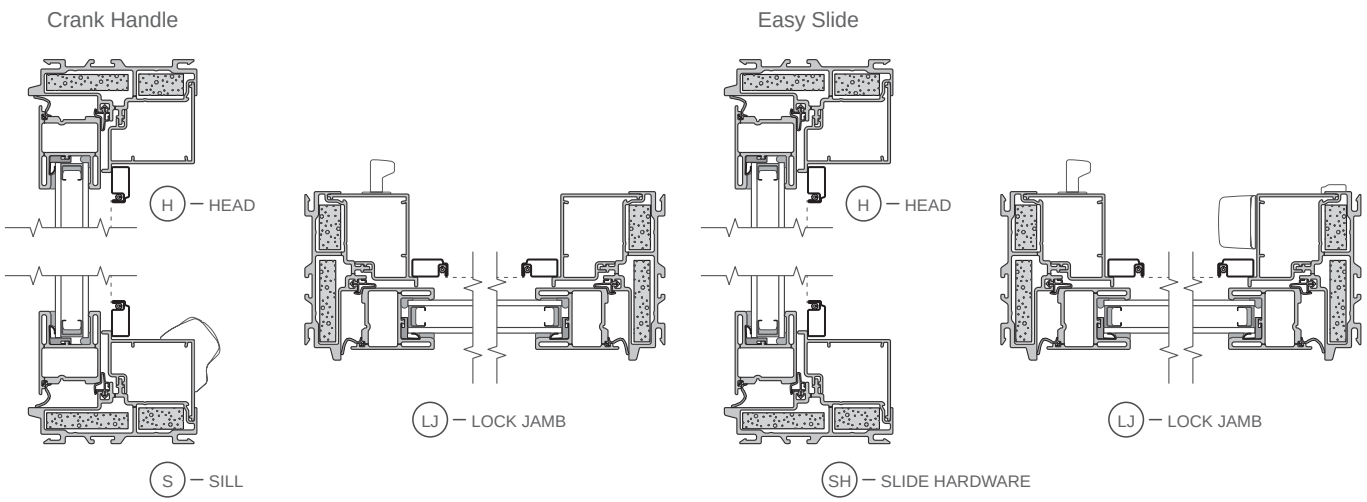


(1) Foam insulation inserts are not available with clear glazing. (2) Dual-color finish is not available on products with integral nailing fin.

(3) Obscure glazing is not available when AdvancedComfort Low-E coated IG is specified.

## Unit Sections - Frame and Glazing Types Overview

### NEW CONSTRUCTION FRAME

**Integral Nailing Fin**

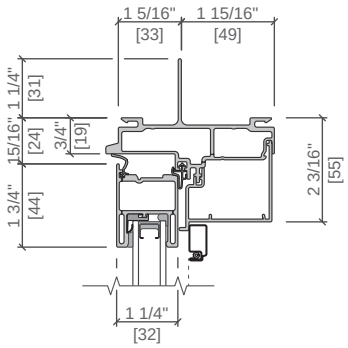


**Standard Block Frame with Standard Fin**

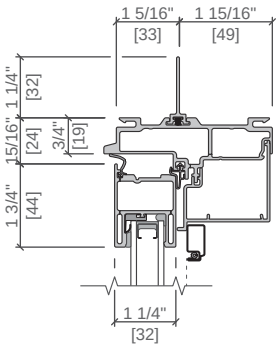


**Standard Block Frame with Off Set Fin**

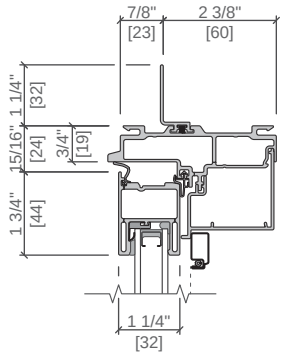


### REPLACEMENT FRAME

**Standard Block Frame**

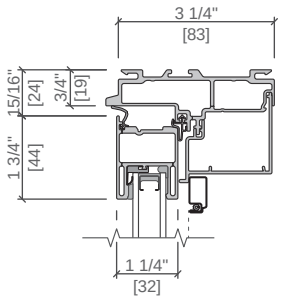


### GLAZING OPTIONS

**11/16" Dual IG**

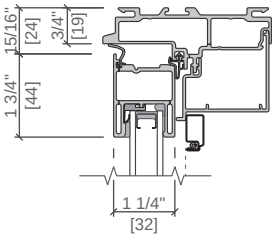


**11/16" Sound IG**

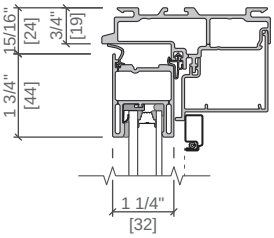


**11/16" Laminated IG**

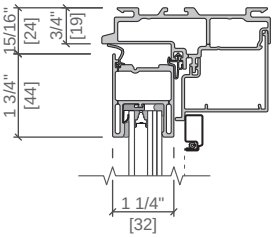


**1" Dual IG**

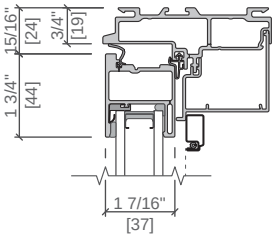


**1" Sound IG**

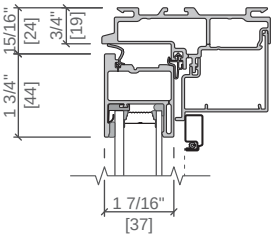


**1" Laminated IG**

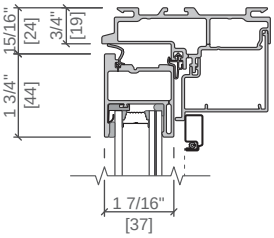


**1" Triple IG**

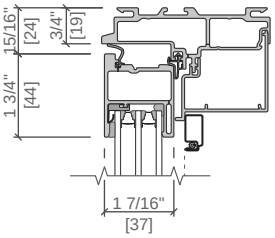


Scale 3" = 1' 0"

All dimensions are approximate.

## Unit Sections - Block Frame, Dual-Pane 11/16" Glazing

### CRANK HARDWARE

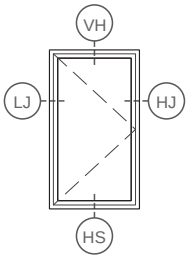


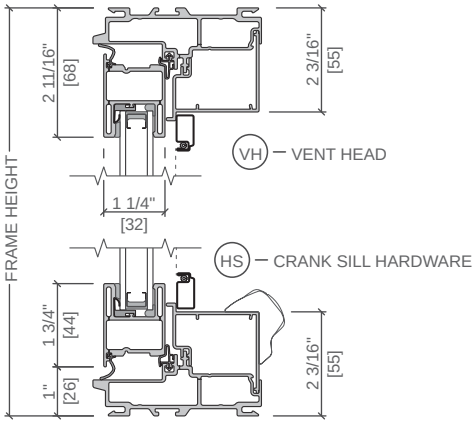


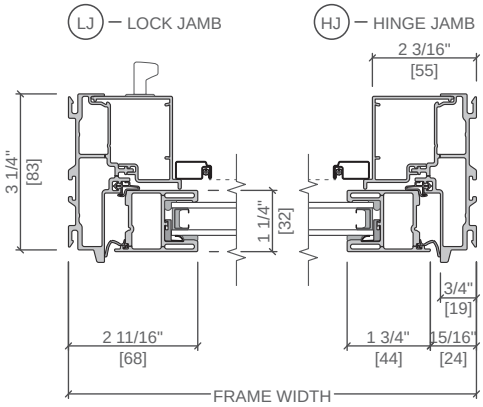


### EASY SLIDE HARDWARE

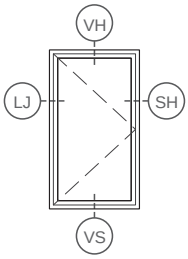


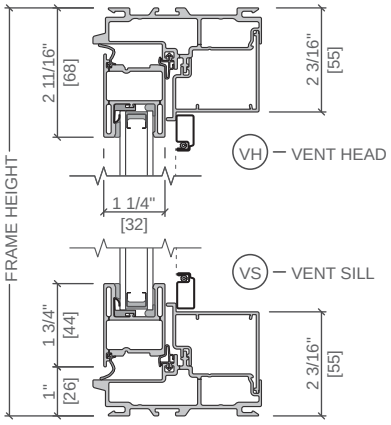


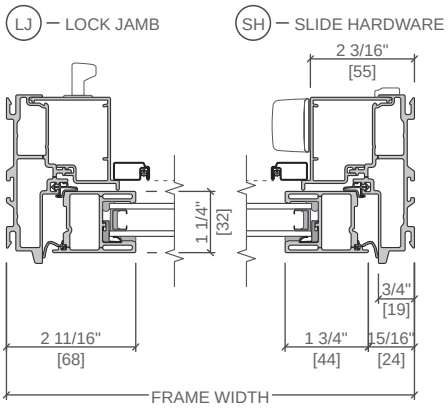


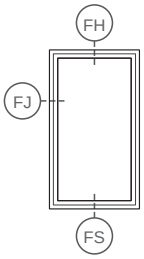


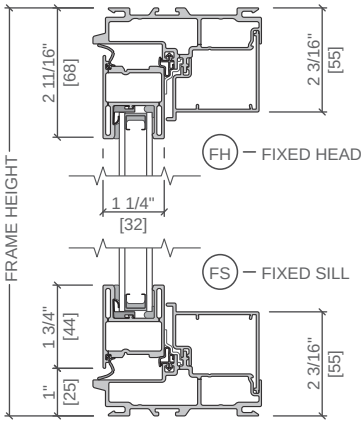


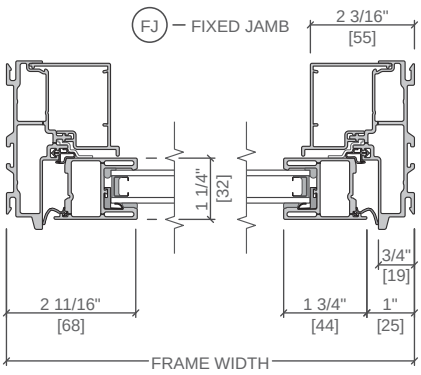


Scale 3" = 1' 0"

All dimensions are approximate.

See the Installation and Performance section on Pella.com for mullion applications and structural limitations.

## Unit Sections - Integral Fin, Dual-Pane 11/16" Glazing

### CRANK HARDWARE

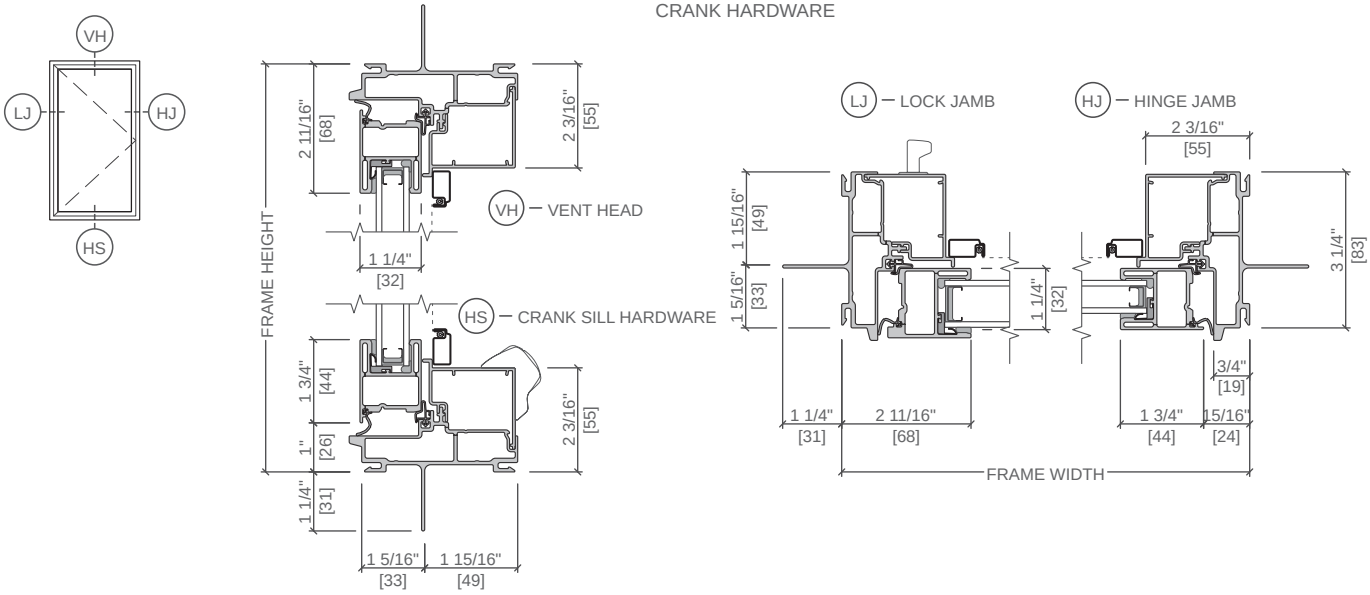


### EASY SLIDE HARDWARE

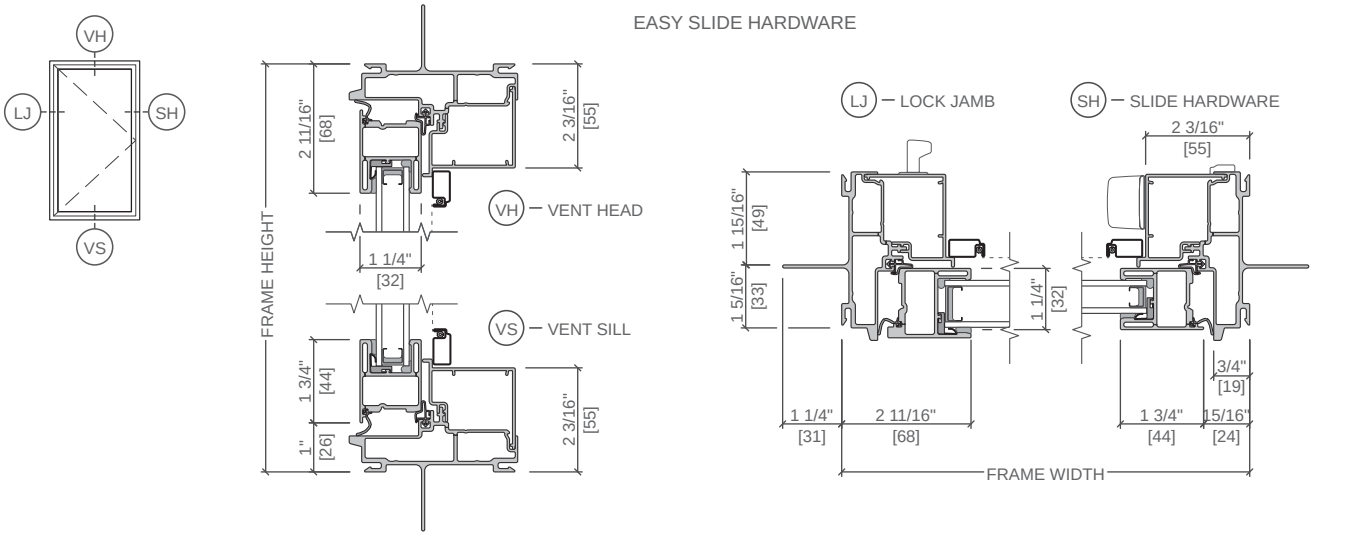


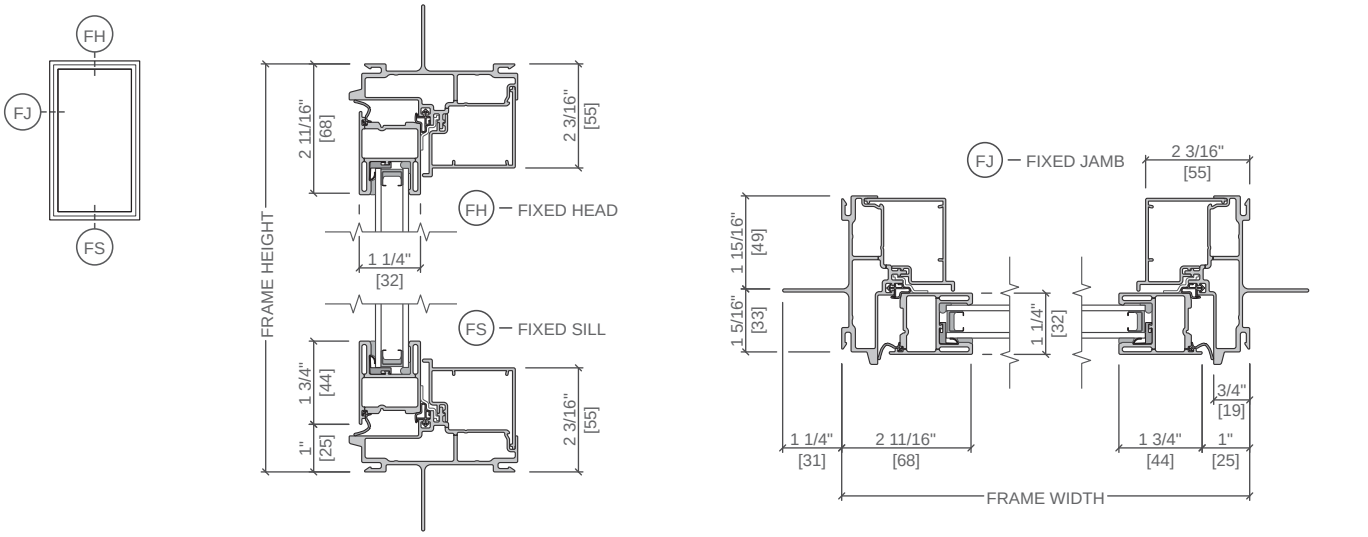


Scale 3" = 1' 0"

All dimensions are approximate.

## Unit Sections - Block Frame, Triple-Pane 1" Glazing

### CRANK HARDWARE

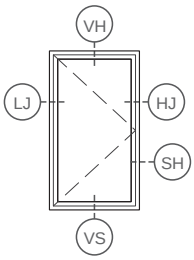


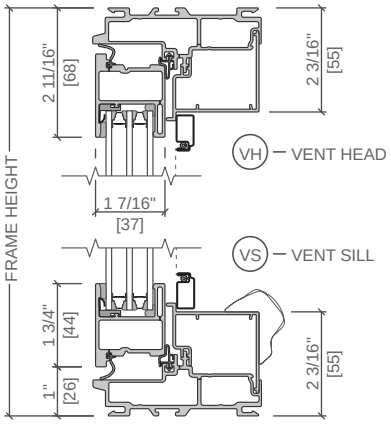


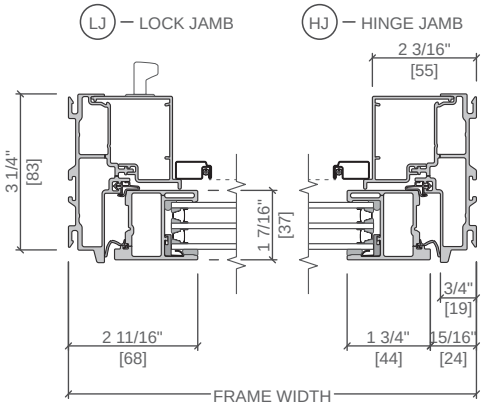


### EASY SLIDE HARDWARE

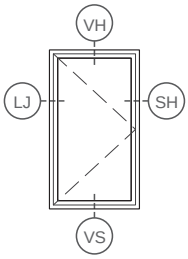


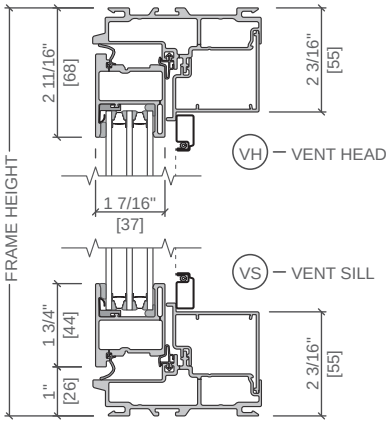


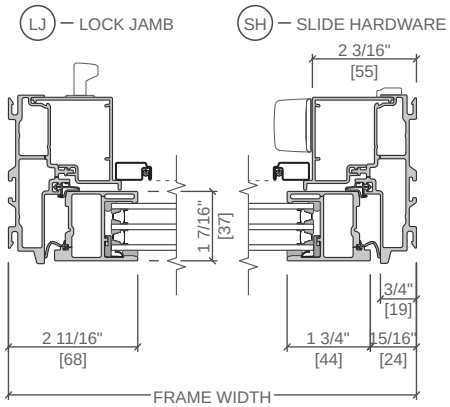


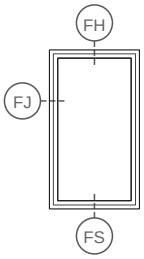


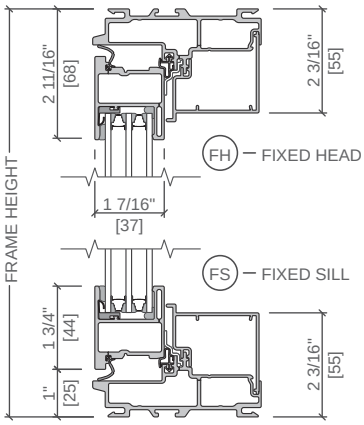


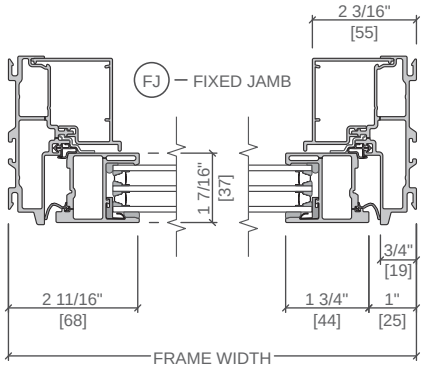


Scale 3" = 1' 0"

All dimensions are approximate.

## Unit Sections - Integral Fin, Triple-Pane 1" Glazing

### CRANK HARDWARE

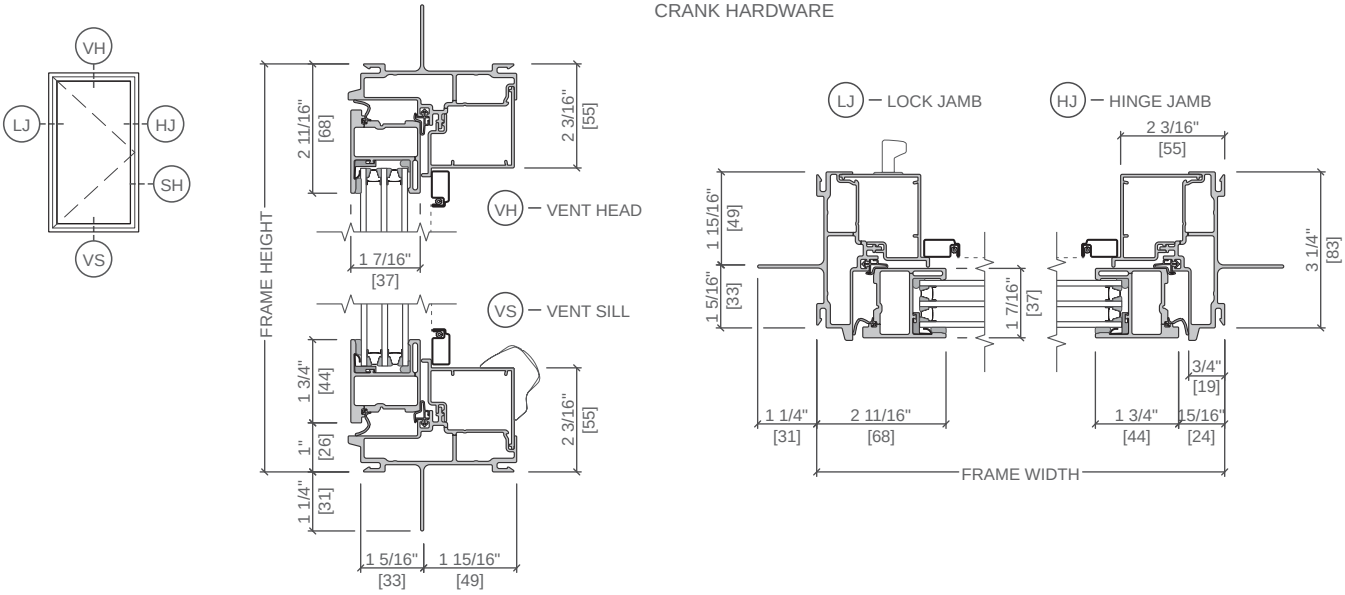


### EASY SLIDE HARDWARE

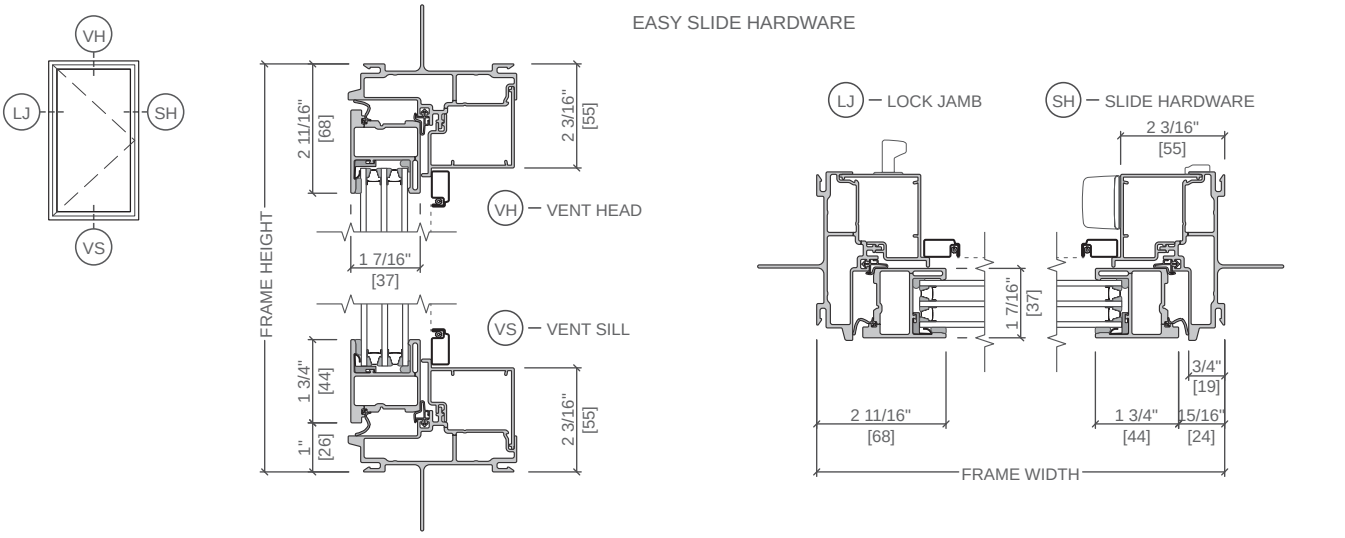


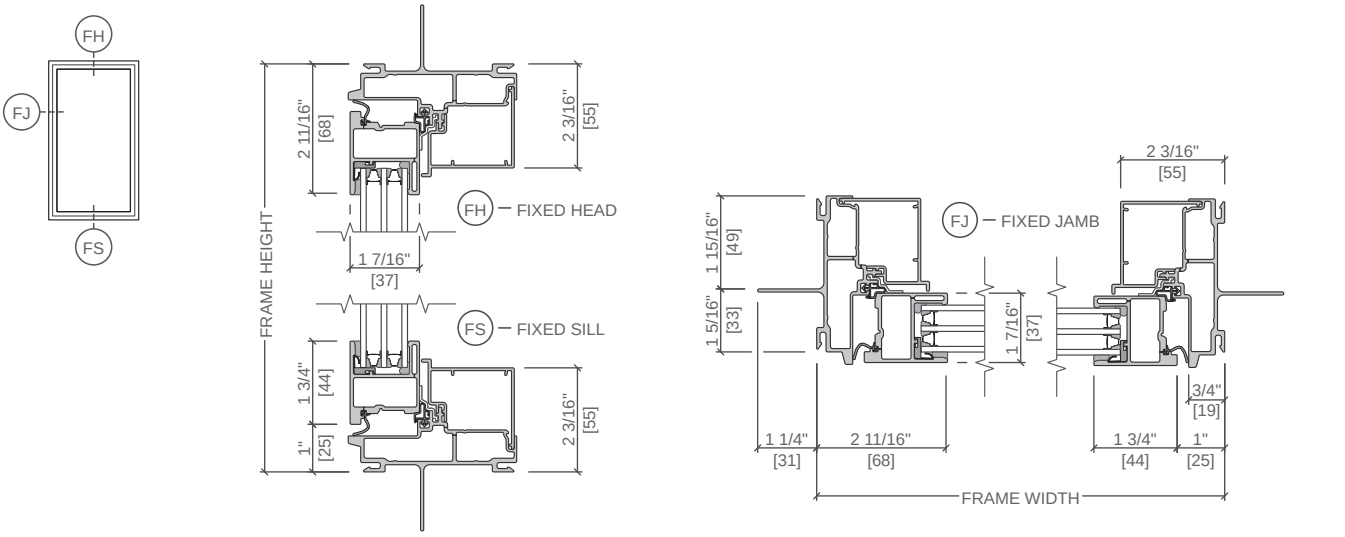


Scale 3" = 1' 0"

All dimensions are approximate.

## Unit Sections - Block Frame, Dual-Pane 1" Impact-Resistant Laminated Glass

### CRANK HARDWARE

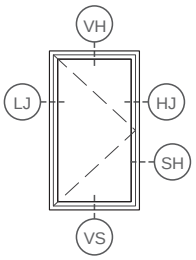


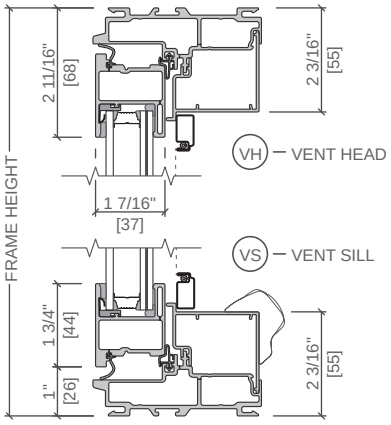


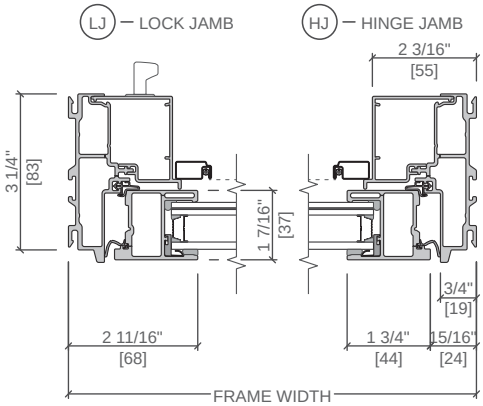


### EASY SLIDE HARDWARE

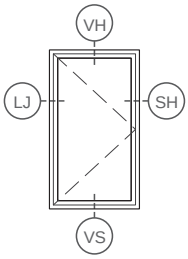


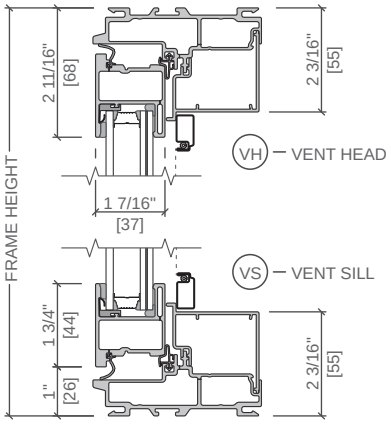


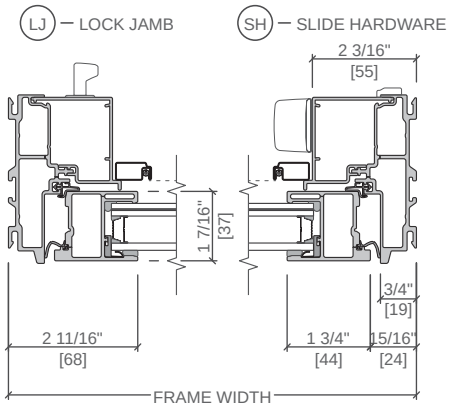


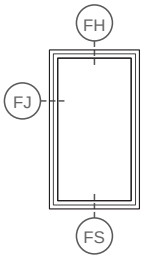


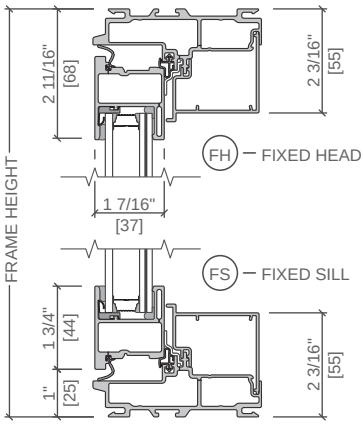


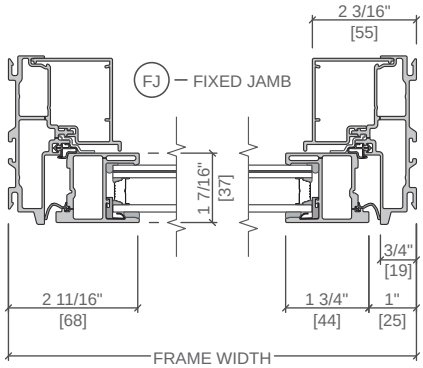


Scale 3" = 1' 0"

All dimensions are approximate.

## Unit Sections - Integral Fin, Dual-Pane Laminated 1" (Sound Perofrmance) Glass

### CRANK HARDWARE

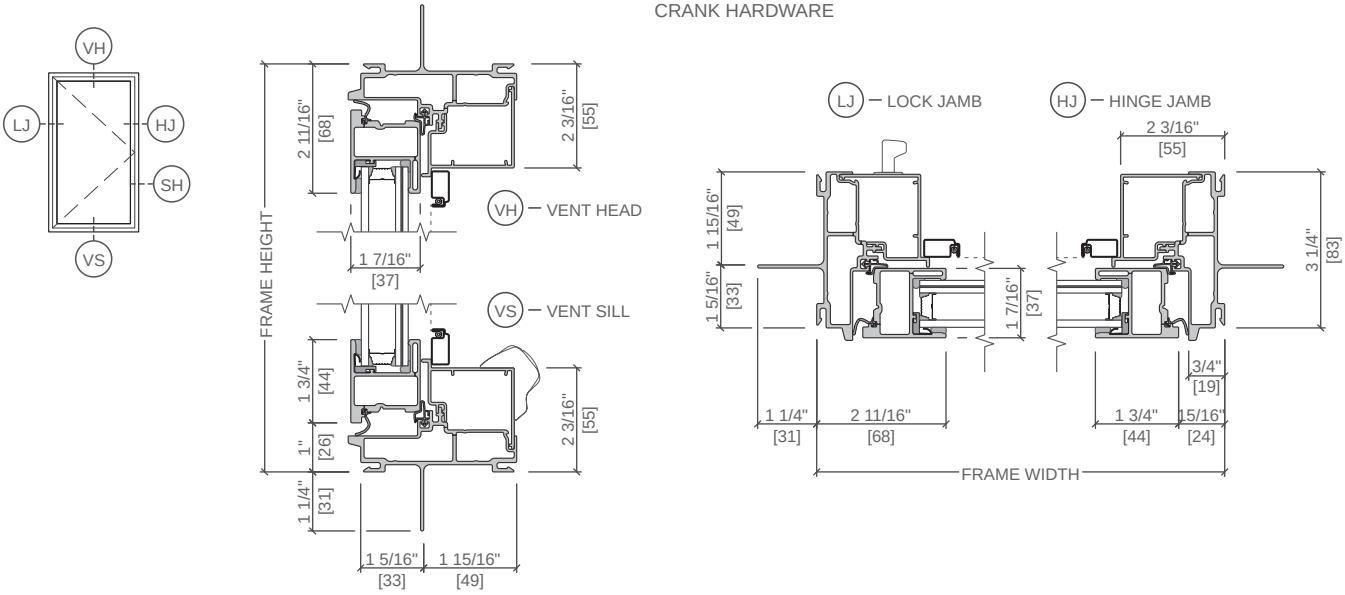


### EASY SLIDE HARDWARE

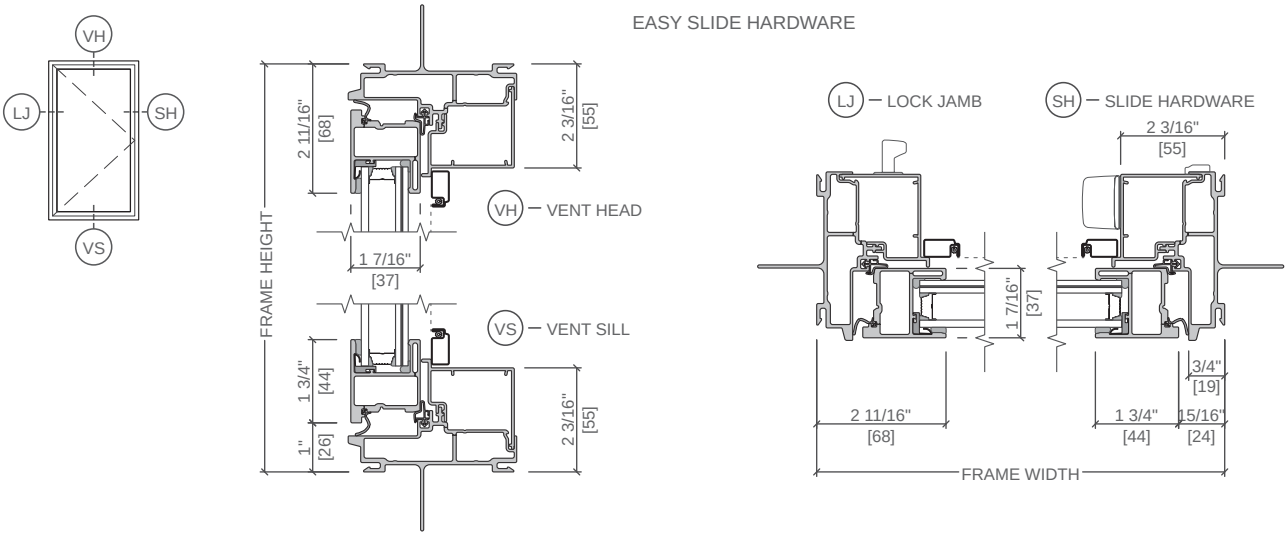


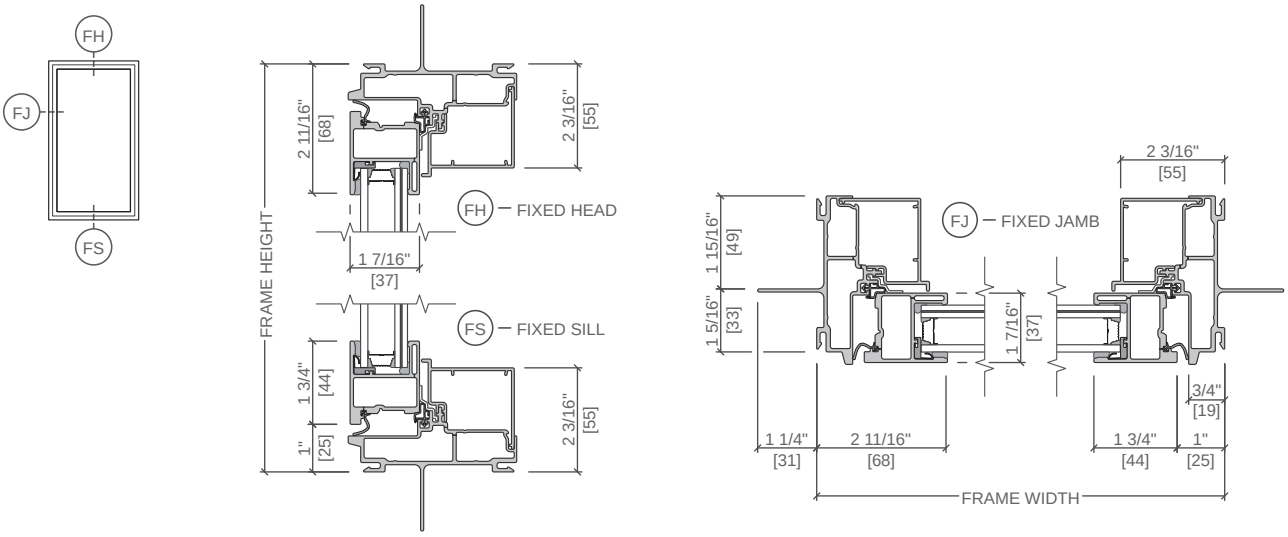


Scale 3" = 1' 0"

All dimensions are approximate.