Size and Performance Data W-POCM-2
Features and Options W-POCM-3
Glazing Performance
Wide
Clad W-POCM-4
Wood W-POCM-5
Narrow
Clad W-POCM-6
Wood W-POCM-12
Size Tables
Wide
Clad W-POCM-18
Wood W-POCM-19
Narrow
Clad W-POCM-20
Wood W-POCM-21
Design Data
Wide
Clad W-POCM-22
Wood W-POCM-23
Narrow
Clad W-POCM-24
Wood W-POCM-25
Detailed Product Descriptions
Wide
Clad W-POCM-26
Wood W-POCM-27
Narrow
Clad W-POCM-28
Wood W-POCM-29
Unit Sections
Wide
Clad W-POCM-30
Wood W-POCM-31
Narrow
Clad W-POCM-32
Wood W-POCM-33

The information published in this document is believed to be accurate at the time of publication. However, because we are constantly working to improve our products, specifications are subject to change without notice. Consult your local Pella representative for up-to-date product information.

Size and Performance Data

	Wide		Narrow	
	Clad	Wood	Clad	Wood
Sizes				
Standard Vent Sizes	●	●	●	●
Special Sizes Available	●	●	●	●
Performance[1]				
Meets or Exceeds AAMA/WDMA Ratings	—	—	CW50 Hallmark Certified	—
Air Infiltration (cfm/ft² of frame @ 1.57 psf wind pressure)[2]	—	—	0.05	—
Water Resistance	—	—	7.5 psf	—
Design Pressure	—	—	50 psf	—
Other Performance Criteria				
Forced Entry Resistance Level (Minimum Security Grade)[3]	—	—	10	—

(—) = Not Available

(1) Maximum performance for single unit when glazed with the appropriate glass thickness. See Design Data pages in this section for specific product performance class and grade values. Values shown are for standard and special sizes; Custom sizes may not have the same values. Contact your local sales representative for complete information.

(2) Published performance data for air infiltration is determined by testing a minimum of four (4) products of NFRC model size. Testing is conducted in accordance with ASTM E283. Air infiltration ratings for products will differ by size. The performance data does not apply to combination assemblies unless noted. Actual product performance may vary for a number of reasons including installation and product care.

(3) The higher the level, the greater the product's ability to resist forced entry.

NOTE: Performance with additional options may not be the same as Standard and Special size units. Please contact your local Pella representative for complete information.

Features and Options

Standard	Options / Upgrades
Glazing	
Glazing Type	
Dual-Pane Insulating Glass	Triple-Pane Insulating Glass
Insulated Glass Options/Low-E Types	
Advanced Low-E	SunDefense™ Low-E
	AdvancedComfort Low-E
	NaturalSun Low-E
	Clear (no Low-E coating)
Additional Glass Options	
Annealed Glass	Tempered Glass
	Obscure Glass(1)
	Tinted Glass (Bronze, Gray and Green)
	Custom
Gas Fill/High Altitude	
Argon	High altitude (with air)
Wood Types	
Pine	Mahogany, Douglas Fir
Exterior	
Exterior Sash Profile	
Ogee - clad, Putty - wood	Putty - clad
Exterior Finish	
EnduraClad® protective finish	EnduraClad Plus protective finish, Factory Primed Pine wood exterior, Unfinished Mahogany wood exterior
Cladding Colors (1)	
Standard colors	Feature Colors, Custom Colors
Interior	
Interior Sash Profile	
Ogee	—
Interior Finish	
Unfinished wood	Factory primed(2), Factory prefinished paint(2), Factory prefinished stain
Hardware	
Champagne, White or Brown	Satin Brass, Satin Nickel or Oil-Rubbed Bronze
Sash Locks	
Multi-point® System	—
Hinging	
Stainless Steel	—
Grilles	
Integral Light Technology® Grilles	
—	Wide, Prairie, Top Row, Cross, New England, Victorian, Simulated French, Custom
Grilles-Between-the-Glass	
—	Wide, Prairie, Cross, Top Row(1), Custom-Equally Divided
Screens	
—	InView™ screens

S = Standard; O = Optional; (—) = Not Available

(1) Contact your local Pella sales representative for current designs and color options.

(2) Not available on Mahogany and Douglas Fir interiors.

Pella® Reserve™ Push-Out Casement

Glazing Performance - Total Unit

Glazing Thickness	Type of Glazing	NFRC Certified Product #	Glass (mm)		Gap Fill	Performance Values[1]				Shaded Areas Meet ENERGY STAR® Performance Criteria in Zones Shown					
										U. S.				Canada[2]	
			Ext.	Int.		U-Factor	SHGC	VLT %	CR	Zone				ER	
Vent Narrow Dual-Pane Glazing - Aluminum-Clad Exterior										N	NC	SC	S		CA
11/16"	Clear IG	PEL-N-11-21566-00001	3	3	air	0.44	0.53	0.56	44						
	with grilles-between-the-glass	PEL-N-11-21757-00001				0.44	0.49	0.51	44						
	with integral grilles	PEL-N-11-21764-00001				0.44	0.49	0.51	44						
11/16"	Advanced Low-E IG	PEL-N-11-21561-00002	3	3	argon	0.28	0.26	0.48	62		NC				
	with grilles-between-the-glass	PEL-N-11-21749-00002				0.28	0.24	0.43	61		NC	SC	S		
	with integral grilles	PEL-N-11-21752-00002				0.29	0.24	0.43	62		NC	SC	S		
11/16"	SunDefense™ Low-E IG	PEL-N-11-21562-00002	3	3	argon	0.28	0.19	0.44	62		NC	SC	S		
	with grilles-between-the-glass	PEL-N-11-21750-00002				0.28	0.18	0.40	62		NC	SC	S		
	with integral grilles	PEL-N-11-21753-00002				0.28	0.18	0.40	62		NC	SC	S		
11/16"	AdvancedComfort Low-E IG	PEL-N-11-21565-00001	3	3	argon	0.25	0.25	0.47	48	N	NC	SC	S		
	with grilles-between-the-glass	PEL-N-11-21756-00001				0.25	0.23	0.42	48	N	NC	SC	S		
	with integral grilles	PEL-N-11-21763-00001				0.27	0.23	0.42	48	N	NC	SC	S		
11/16"	NaturalSun Low-E IG	PEL-N-11-21563-00002	3	3	argon	0.29	0.47	0.54	61	N					
	with grilles-between-the-glass	PEL-N-11-21751-00002				0.29	0.43	0.49	61	N					
	with integral grilles	PEL-N-11-21754-00002				0.29	0.43	0.49	61	N					
Vent Narrow Dual-Pane Tinted Glazing															
11/16"	Bronze Advanced Low-E IG	PEL-N-11-21603-00001	5	3	argon	0.29	0.23	0.31	60		NC	SC	S		
	with grilles-between-the-glass	PEL-N-11-21833-00001				0.30	0.21	0.28	60		NC	SC	S		
	with integral grilles	PEL-N-11-21839-00001				0.30	0.21	0.28	60		NC	SC	S		
11/16"	Gray Advanced Low-E IG	PEL-N-11-21604-00001	5	3	argon	0.29	0.21	0.26	60		NC	SC	S		
	with grilles-between-the-glass	PEL-N-11-21834-00001				0.30	0.19	0.24	60		NC	SC	S		
	with integral grilles	PEL-N-11-21840-00001				0.30	0.19	0.24	60		NC	SC	S		
11/16"	Green Advanced Low-E IG	PEL-N-11-21605-00001	5	3	argon	0.29	0.26	0.42	60		NC				
	with grilles-between-the-glass	PEL-N-11-21835-00001				0.30	0.24	0.38	60		NC	SC	S		
	with integral grilles	PEL-N-11-21841-00001				0.30	0.24	0.38	60		NC	SC	S		
Vent Narrow Dual-Pane High Altitude Glazing															
11/16"	Advanced Low-E IG	PEL-N-11-21567-00001	3	3	air	0.31	0.26	0.48	57						
	with grilles-between-the-glass	PEL-N-11-21758-00001				0.32	0.24	0.43	57				S		
	with integral grilles	PEL-N-11-21765-00001				0.32	0.24	0.43	57				S		
11/16"	SunDefense Low-E IG	PEL-N-11-21568-00001	3	3	air	0.31	0.20	0.44	58				S		
	with grilles-between-the-glass	PEL-N-11-21759-00001				0.32	0.18	0.40	58				S		
	with integral grilles	PEL-N-11-21766-00001				0.32	0.18	0.40	58				S		
11/16"	AdvancedComfort Low-E IG	PEL-N-11-21570-00001	3	3	air	0.27	0.25	0.47	44	N	NC	SC	S		
	with grilles-between-the-glass	PEL-N-11-21761-00001				0.28	0.23	0.42	44		NC	SC	S		
	with integral grilles	PEL-N-11-21768-00001				0.29	0.23	0.42	44		NC	SC	S		
11/16"	NaturalSun Low-E IG	PEL-N-11-21569-00001	3	3	air	0.32	0.47	0.54	57						
	with grilles-between-the-glass	PEL-N-11-21760-00001				0.33	0.43	0.49	57						
	with integral grilles	PEL-N-11-21767-00001				0.33	0.43	0.49	57						

R-Value = 1/U-Factor
SHGC = Solar Heat Gain Coefficient
VLT % = Visible Light Transmission
CR = Condensation Resistance
ER = Canadian Energy Rating

Climate Zones

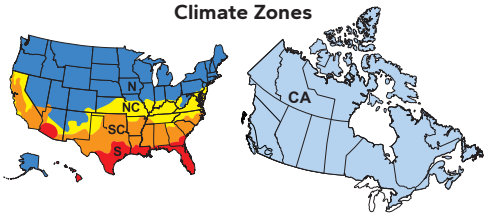

(1) Glazing performance values are calculated for Pine using NFRC 100, NFRC 200 and NFRC 500. Thermal performance of other wood species may vary. ENERGY STAR® values are updated to 2016 (Version 6) criteria.

(2) The values shown are based on Canada's updated ENERGY STAR® 2020 initiative.

Based on unit size, some products will use 2.5 mm glass that will have equivalent or improved performance from what is shown.

See the Product Performance section for more detailed information or visit www.energystar.gov for Energy Star guidelines.

Pella® Reserve™ Push-Out Casement

Glazing Performance - Total Unit

Glazing Thickness	Type of Glazing	NFRC Certified Product #	Glass (mm)		Gap Fill	Performance Values [1]				Shaded Areas Meet ENERGY STAR® Performance Criteria in Zones Shown					
			Ext.	Int.		U-Factor	SHGC	VLT %	CR	U. S.				Canada [2]	
										Zone				ER	
Fixed Narrow Dual-Pane Glazing - Aluminum-Clad Exterior										N	NC	SC	S		CA
11/16"	Clear IG	PEL-N-1-53572-00001	3	3	air	0.45	0.62	0.65	44						
	with grilles-between-the-glass	PEL-N-1-53763-00001				0.46	0.56	0.58	44						
	with integral grilles	PEL-N-1-53770-00001				0.46	0.56	0.58	44						
11/16"	Advanced Low-E IG	PEL-N-1-53567-00002	3	3	argon	0.27	0.30	0.55	62	N	NC				
	with grilles-between-the-glass	PEL-N-1-53755-00002				0.28	0.27	0.50	62		NC				
	with integral grilles	PEL-N-1-53758-00002				0.28	0.27	0.50	62		NC				
11/16"	SunDefense™ Low-E IG	PEL-N-1-53568-00002	3	3	argon	0.26	0.22	0.51	62	N	NC	SC	S		
	with grilles-between-the-glass	PEL-N-1-53756-00002				0.27	0.20	0.46	62	N	NC	SC	S		
	with integral grilles	PEL-N-1-53759-00002				0.27	0.20	0.46	62	N	NC	SC	S		
11/16"	AdvancedComfort Low-E IG	PEL-N-1-53571-00001	3	3	argon	0.23	0.29	0.54	48	N	NC				
	with grilles-between-the-glass	PEL-N-1-53762-00001				0.24	0.26	0.48	48	N	NC				
	with integral grilles	PEL-N-1-53769-00001				0.25	0.26	0.48	48	N	NC				
11/16"	NaturalSun Low-E IG	PEL-N-1-53569-00002	3	3	argon	0.28	0.55	0.63	61	N				37	CA
	with grilles-between-the-glass	PEL-N-1-53757-00002				0.28	0.49	0.56	61	N					
	with integral grilles	PEL-N-1-53760-00002				0.29	0.49	0.56	61	N					
Fixed Narrow Dual-Pane Tinted Glazing															
11/16"	Bronze Advanced Low-E	PEL-N-1-53609-00001	5	3	argon	0.28	0.26	0.36	59		NC				
	with grilles-between-the-glass	PEL-N-1-53839-00001				0.29	0.24	0.32	59		NC	SC	S		
	with integral grilles	PEL-N-1-53845-00001				0.29	0.24	0.32	59		NC	SC	S		
11/16"	Gray Advanced Low-E IG	PEL-N-1-53610-00001	5	3	argon	0.28	0.24	0.31	59		NC	SC	S		
	with grilles-between-the-glass	PEL-N-1-53840-00001				0.29	0.22	0.27	59		NC	SC	S		
	with integral grilles	PEL-N-1-53846-00001				0.29	0.22	0.27	59		NC	SC	S		
11/16"	Green Advanced Low-E IG	PEL-N-1-53611-00001	5	3	argon	0.28	0.30	0.49	59		NC				
	with grilles-between-the-glass	PEL-N-1-53841-00001				0.29	0.27	0.43	59		NC				
	with integral grilles	PEL-N-1-53847-00001				0.29	0.27	0.43	59		NC				
Fixed Narrow Dual-Pane High Altitude Glazing															
11/16"	Advanced Low-E IG	PEL-N-1-53573-00001	3	3	air	0.31	0.30	0.55	57						
	with grilles-between-the-glass	PEL-N-1-53764-00001				0.32	0.27	0.50	57						
	with integral grilles	PEL-N-1-53771-00001				0.32	0.27	0.50	57						
11/16"	SunDefense Low-E IG	PEL-N-1-53574-00001	3	3	air	0.30	0.22	0.51	57		NC	SC	S		
	with grilles-between-the-glass	PEL-N-1-53765-00001				0.31	0.20	0.46	57				S		
	with integral grilles	PEL-N-1-53772-00001				0.32	0.20	0.46	57				S		
11/16"	AdvancedComfort Low-E IG	PEL-N-1-53576-00001	3	3	air	0.26	0.29	0.54	44	N	NC				
	with grilles-between-the-glass	PEL-N-1-53767-00001				0.27	0.26	0.48	44	N	NC				
	with integral grilles	PEL-N-1-53774-00001				0.28	0.26	0.48	44		NC				
11/16"	NaturalSun Low-E IG	PEL-N-1-53575-00001	3	3	air	0.32	0.54	0.63	56						
	with grilles-between-the-glass	PEL-N-1-53766-00001				0.33	0.49	0.56	56						
	with integral grilles	PEL-N-1-53773-00001				0.33	0.49	0.56	56						

R-Value = 1/U-Factor
SHGC = Solar Heat Gain Coefficient
VLT % = Visible Light Transmission
CR = Condensation Resistance
ER = Canadian Energy Rating

Climate Zones

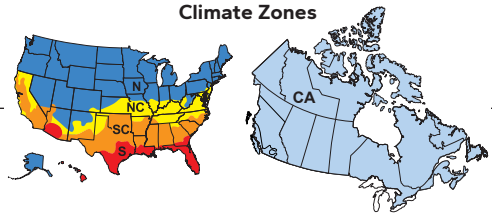

(1) Glazing performance values are calculated for Pine using NFRC 100, NFRC 200 and NFRC 500. Thermal performance of other wood species may vary. ENERGY STAR® values are updated to 2016 (Version 6) criteria.

(2) The values shown are based on Canada's updated ENERGY STAR® 2020 initiative.

Based on unit size, some products will use 2.5 mm glass that will have equivalent or improved performance from what is shown.

See the Product Performance section for more detailed information or visit www.energystar.gov for Energy Star guidelines.

Glazing Performance - Total Unit

Glazing Thickness	Type of Glazing	NFRC Certified Product #	Glass (mm)			Gap Fill	Performance Values[1]				Shaded Areas Meet ENERGY STAR® Performance Criteria in Zones Shown					
			Ext.	Mid.	Int.		U-Factor	SHGC	VLT %	CR	U. S. Zone				Canada[2] ER	
Vent Narrow Triple-Pane Glazing - Aluminum-Clad Exterior											N	NC	SC	S		CA
1"	Advanced Low-E IG	PEL-N-11-21640-00001	3	3	3	argon	0.22	0.23	0.42	71	N	NC	SC	S		
	with grilles-between-the-glass	PEL-N-11-21906-00001					0.22	0.21	0.38	71	N	NC	SC	S		
	with integral grilles	PEL-N-11-21915-00001					0.22	0.21	0.38	71	N	NC	SC	S		
1"	Advanced Low-E IG	PEL-N-11-21646-00001	3	3	3	Krypton	0.19	0.23	0.42	75	N	NC	SC	S	29	CA
	with grilles-between-the-glass	PEL-N-11-21912-00001					0.19	0.21	0.38	75	N	NC	SC	S	28	CA
	with integral grilles	PEL-N-11-21921-00001					0.19	0.21	0.38	75	N	NC	SC	S	28	CA
1"	SunDefense™ Low-E IG	PEL-N-11-21641-00001	3	3	3	argon	0.22	0.17	0.39	71	N	NC	SC	S		
	with grilles-between-the-glass	PEL-N-11-21907-00001					0.22	0.16	0.35	71	N	NC	SC	S		
	with integral grilles	PEL-N-11-21916-00001					0.22	0.16	0.35	71	N	NC	SC	S		
1"	SunDefense™ Low-E IG	PEL-N-11-21647-00001	3	3	3	Krypton	0.19	0.17	0.39	75	N	NC	SC	S	26	CA
	with grilles-between-the-glass	PEL-N-11-21913-00001					0.19	0.16	0.35	75	N	NC	SC	S	25	CA
	with integral grilles	PEL-N-11-21922-00001					0.19	0.16	0.35	75	N	NC	SC	S	25	CA
1"	NaturalSun Low-E IG	PEL-N-11-21639-00001	3	3	3	argon	0.22	0.39	0.47	70	N	NC			35	CA
	with grilles-between-the-glass	PEL-N-11-21905-00001					0.22	0.35	0.43	70	N	NC				
	with integral grilles	PEL-N-11-21914-00001					0.22	0.35	0.43	70	N	NC				
1"	NaturalSun Low-E IG	PEL-N-11-21645-00001	3	3	3	Krypton	0.19	0.39	0.47	74	N	NC			39	CA
	with grilles-between-the-glass	PEL-N-11-21911-00001					0.19	0.35	0.43	74	N	NC			36	CA
	with integral grilles	PEL-N-11-21920-00001					0.19	0.35	0.43	74	N	NC			36	CA
Vent Narrow Triple-Pane High Altitude Glazing																
1"	Advanced Low-E IG	PEL-N-11-21643-00001	3	3	3	air	0.25	0.23	0.42	66	N	NC	SC	S		
	with grilles-between-the-glass	PEL-N-11-21909-00001					0.25	0.22	0.38	66	N	NC	SC	S		
	with integral grilles	PEL-N-11-21918-00001					0.25	0.22	0.38	66	N	NC	SC	S		
1"	SunDefense Low-E IG	PEL-N-11-21644-00001	3	3	3	air	0.25	0.18	0.39	66	N	NC	SC	S		
	with grilles-between-the-glass	PEL-N-11-21910-00001					0.25	0.16	0.35	66	N	NC	SC	S		
	with integral grilles	PEL-N-11-21919-00001					0.25	0.16	0.35	66	N	NC	SC	S		
1"	NaturalSun Low-E IG	PEL-N-11-21642-00001	3	3	3	air	0.25	0.39	0.47	66	N	NC				
	with grilles-between-the-glass	PEL-N-11-21908-00001					0.26	0.35	0.43	66	N	NC				
	with integral grilles	PEL-N-11-21917-00001					0.26	0.35	0.43	66	N	NC				

R-Value = 1/U-Factor
SHGC = Solar Heat Gain Coefficient
VLT % = Visible Light Transmission
CR = Condensation Resistance
ER = Canadian Energy Rating

(1) Glazing performance values are calculated for Pine using NFRC 100, NFRC 200 and NFRC 500. Thermal performance of other wood species may vary. ENERGY STAR® values are updated to 2016 (Version 6) criteria.

(2) The values shown are based on Canada's updated ENERGY STAR® 2020 initiative.

Based on unit size, some products will use 2.5 mm glass that will have equivalent or improved performance from what is shown.

See the Product Performance section for more detailed information or visit www.energystar.gov for Energy Star guidelines.

Climate Zones

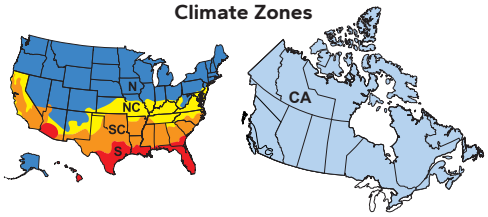

Glazing Performance - Total Unit

Glazing Thickness	Type of Glazing	NFRC Certified Product #	Glass (mm)			Gap Fill	Performance Values [1]				Shaded Areas Meet ENERGY STAR® Performance Criteria in Zones Shown					
			Ext.	Mid.	Int.		U-Factor	SHGC	VLT %	CR	U. S. Zone				Canada [2] ER	
Fixed Narrow Triple-Pane Glazing - Aluminum-Clad Exterior											N	NC	SC	S		CA
1"	Advanced Low-E IG	PEL-N-1-53646-00001	3	3	3	argon	0.20	0.27	0.49	71	N	NC			30	CA
	with grilles-between-the-glass	PEL-N-1-53912-00001					0.20	0.24	0.44	71	N	NC	SC	S	29	CA
	with integral grilles	PEL-N-1-53921-00001					0.20	0.24	0.44	71	N	NC	SC	S	29	CA
1"	Advanced Low-E IG	PEL-N-1-53652-00001	3	3	3	Krypton	0.16	0.27	0.49	75	N	NC			35	CA
	with grilles-between-the-glass	PEL-N-1-53918-00001					0.17	0.24	0.44	75	N	NC	SC	S	32	CA
	with integral grilles	PEL-N-1-53927-00001					0.17	0.24	0.44	75	N	NC	SC	S	32	CA
1"	SunDefense™ Low-E IG	PEL-N-1-53647-00001	3	3	3	argon	0.20	0.20	0.45	71	N	NC	SC	S	26	CA
	with grilles-between-the-glass	PEL-N-1-53913-00001					0.20	0.18	0.40	71	N	NC	SC	S	25	CA
	with integral grilles	PEL-N-1-53922-00001					0.20	0.18	0.40	71	N	NC	SC	S	25	CA
1"	SunDefense™ Low-E IG	PEL-N-1-53653-00001	3	3	3	Krypton	0.16	0.20	0.45	75	N	NC	SC	S	31	CA
	with grilles-between-the-glass	PEL-N-1-53919-00001					0.16	0.18	0.40	75	N	NC	SC	S	30	CA
	with integral grilles	PEL-N-1-53928-00001					0.17	0.18	0.40	75	N	NC	SC	S	29	CA
1"	NaturalSun Low-E IG	PEL-N-1-53645-00001	3	3	3	argon	0.20	0.45	0.55	71	N				41	CA
	with grilles-between-the-glass	PEL-N-1-53911-00001					0.21	0.40	0.49	71	N	NC			37	CA
	with integral grilles	PEL-N-1-53920-00001					0.21	0.40	0.49	71	N	NC			37	CA
1"	NaturalSun Low-E IG	PEL-N-1-53651-00001	3	3	3	Krypton	0.17	0.45	0.55	75	N				45	CA
	with grilles-between-the-glass	PEL-N-1-53917-00001					0.17	0.40	0.49	75	N	NC			42	CA
	with integral grilles	PEL-N-1-53926-00001					0.17	0.40	0.49	75	N	NC			42	CA
Fixed Narrow Triple-Pane High Altitude Glazing																
1"	Advanced Low-E IG	PEL-N-1-53649-00001	3	3	3	air	0.24	0.27	0.49	67	N	NC				
	with grilles-between-the-glass	PEL-N-1-53915-00001					0.24	0.24	0.44	67	N	NC	SC	S		
	with integral grilles	PEL-N-1-53924-00001					0.24	0.24	0.44	67	N	NC	SC	S		
1"	SunDefense Low-E IG	PEL-N-1-53650-00001	3	3	3	air	0.24	0.20	0.45	67	N	NC	SC	S		
	with grilles-between-the-glass	PEL-N-1-53916-00001					0.24	0.18	0.40	67	N	NC	SC	S		
	with integral grilles	PEL-N-1-53925-00001					0.24	0.18	0.40	67	N	NC	SC	S		
1"	NaturalSun Low-E IG	PEL-N-1-53648-00001	3	3	3	air	0.24	0.45	0.55	66	N				36	CA
	with grilles-between-the-glass	PEL-N-1-53914-00001					0.25	0.40	0.49	66	N	NC				
	with integral grilles	PEL-N-1-53923-00001					0.24	0.40	0.49	66	N	NC				

R-Value = 1/U-Factor
SHGC = Solar Heat Gain Coefficient
VLT % = Visible Light Transmission
CR = Condensation Resistance
ER = Canadian Energy Rating

Climate Zones

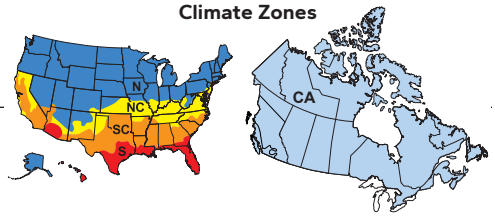

(1) Glazing performance values are calculated for Pine using NFRC 100, NFRC 200 and NFRC 500. Thermal performance of other wood species may vary. ENERGY STAR® values are updated to 2016 (Version 6) criteria.

(2) The values shown are based on Canada's updated ENERGY STAR® 2020 initiative.

Based on unit size, some products will use 2.5 mm glass that will have equivalent or improved performance from what is shown.

See the Product Performance section for more detailed information or visit www.energystar.gov for Energy Star guidelines.

Glazing Performance - Total Unit

Glazing Thickness	Type of Glazing	NFRC Certified Product #	Glass (mm)		Gap Fill	Performance Values[1]				Shaded Areas Meet ENERGY STAR® Performance Criteria in Zones Shown					
										U. S.				Canada[2]	
			Ext.	Int.		U-Factor	SHGC	VLT %	CR	Zone				ER	
Fixed Narrow Dual-Pane Glazing - Wood Exterior										N	NC	SC	S		CA
11/16"	Clear IG	PEL-N-41-37285-00001	3	3	air	0.44	0.62	0.65	45						
	with integral grilles	PEL-N-41-37483-00001				0.45	0.56	0.58	45						
11/16"	Advanced Low-E IG	PEL-N-41-37280-00002	3	3	argon	0.26	0.30	0.56	62	N	NC				
	with integral grilles	PEL-N-41-37471-00002				0.27	0.27	0.50	62	N	NC				
11/16"	SunDefense™ Low-E IG	PEL-N-41-37281-00002	3	3	argon	0.26	0.22	0.51	62	N	NC	SC	S		
	with integral grilles	PEL-N-41-37472-00002				0.26	0.20	0.46	62	N	NC	SC	S		
11/16"	AdvancedComfort Low-E IG	PEL-N-41-37284-00001	3	3	argon	0.22	0.29	0.54	49	N	NC				
	with integral grilles	PEL-N-41-37482-00001				0.25	0.26	0.49	49	N	NC				
11/16"	NaturalSun Low-E IG	PEL-N-41-37282-00002	3	3	argon	0.27	0.55	0.63	61	N				38	CA
	with integral grilles	PEL-N-41-37473-00002				0.28	0.49	0.56	61	N					
Fixed Narrow Dual-Pane Tinted Glazing															
11/16"	Bronze Advanced Low-E IG	PEL-N-41-37322-00001	5	3	argon	0.27	0.26	0.36	60	N	NC				
	with integral grilles	PEL-N-41-37558-00001				0.28	0.24	0.32	60		NC	SC	S		
11/16"	Gray Advanced Low-E IG	PEL-N-41-37323-00001	5	3	argon	0.27	0.24	0.31	60	N	NC	SC	S		
	with integral grilles	PEL-N-41-37559-00001				0.28	0.22	0.28	60		NC	SC	S		
11/16"	Green Advanced Low-E IG	PEL-N-41-37324-00001	5	3	argon	0.27	0.30	0.49	60	N	NC				
	with integral grilles	PEL-N-41-37560-00001				0.28	0.27	0.44	60		NC				
Fixed Narrow Dual-Pane High Altitude Glazing															
11/16"	Advanced Low-E IG	PEL-N-41-37286-00001	3	3	air	0.30	0.30	0.56	57		NC				
	with integral grilles	PEL-N-41-37484-00001				0.31	0.27	0.50	57						
11/16"	SunDefense Low-E IG	PEL-N-41-37287-00001	3	3	air	0.30	0.22	0.51	58		NC	SC	S		
	with integral grilles	PEL-N-41-37485-00001				0.31	0.20	0.46	58				S		
11/16"	AdvancedComfort Low-E IG	PEL-N-41-37289-00001	3	3	air	0.25	0.29	0.54	44	N	NC				
	with integral grilles	PEL-N-41-37487-00001				0.28	0.26	0.49	44		NC				
11/16"	NaturalSun Low-E IG	PEL-N-41-37288-00001	3	3	air	0.31	0.54	0.63	57						
	with integral grilles	PEL-N-41-37486-00001				0.32	0.49	0.56	57						

R-Value = 1/U-Factor
SHGC = Solar Heat Gain Coefficient
VLT % = Visible Light Transmission
CR = Condensation Resistance
ER = Canadian Energy Rating

(1) Glazing performance values are calculated for Pine using NFRC 100, NFRC 200 and NFRC 500. Thermal performance of other wood species may vary. ENERGY STAR® values are updated to 2016 (Version 6) criteria.

(2) The values shown are based on Canada's updated ENERGY STAR® 2020 initiative.

Based on unit size, some products will use 2.5 mm glass that will have equivalent or improved performance from what is shown.

See the Product Performance section for more detailed information or visit www.energystar.gov for Energy Star guidelines.

Climate Zones

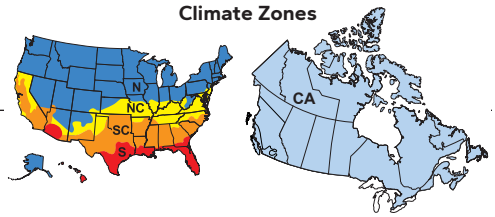

Glazing Performance - Total Unit

Glazing Thickness	Type of Glazing	NFRC Certified Product #	Glass (mm)			Gap Fill	Performance Values [1]				Shaded Areas Meet ENERGY STAR® Performance Criteria in Zones Shown					
			Ext.	Mid	Int.		U-Factor	SHGC	VLT %	CR	U. S. Zone				Canada [2] ER	
Vent Narrow Triple-Pane Glazing - Wood Exterior											N	NC	SC	S		CA
1"	Advanced Low-E IG	PEL-N-39-18944-00001	3	3	3	argon	0.21	0.23	0.42	71	N	NC	SC	S	27	CA
	with grilles-between-the-glass	PEL-N-39-19210-00001					0.21	0.21	0.38	71	N	NC	SC	S	26	CA
	with integral grilles	PEL-N-39-19219-00001					0.21	0.21	0.38	71	N	NC	SC	S	26	CA
1"	Advanced Low-E IG	PEL-N-39-18950-00001	3	3	3	Krypton	0.17	0.23	0.42	76	N	NC	SC	S	32	CA
	with grilles-between-the-glass	PEL-N-39-19216-00001					0.18	0.21	0.38	76	N	NC	SC	S	30	CA
	with integral grilles	PEL-N-39-19225-00001					0.18	0.21	0.38	76	N	NC	SC	S	30	CA
1"	SunDefense™ Low-E IG	PEL-N-39-18945-00001	3	3	3	argon	0.20	0.17	0.39	72	N	NC	SC	S	25	CA
	with grilles-between-the-glass	PEL-N-39-19211-00001					0.21	0.16	0.35	72	N	NC	SC	S		
	with integral grilles	PEL-N-39-19220-00001					0.21	0.16	0.35	72	N	NC	SC	S		
1"	SunDefense™ Low-E IG	PEL-N-39-18951-00001	3	3	3	Krypton	0.17	0.17	0.39	77	N	NC	SC	S	28	CA
	with grilles-between-the-glass	PEL-N-39-19217-00001					0.17	0.16	0.35	77	N	NC	SC	S	28	CA
	with integral grilles	PEL-N-39-19226-00001					0.17	0.16	0.35	77	N	NC	SC	S	28	CA
1"	NaturalSun Low-E IG	PEL-N-39-18943-00001	3	3	3	argon	0.21	0.39	0.48	71	N	NC			36	CA
	with grilles-between-the-glass	PEL-N-39-19209-00001					0.21	0.35	0.43	71	N	NC			34	CA
	with integral grilles	PEL-N-39-19218-00001					0.21	0.35	0.43	71	N	NC			34	CA
1"	NaturalSun Low-E IG	PEL-N-39-18949-00001	3	3	3	Krypton	0.18	0.39	0.48	76	N	NC			40	CA
	with grilles-between-the-glass	PEL-N-39-19215-00001					0.18	0.35	0.43	76	N	NC			38	CA
	with integral grilles	PEL-N-39-19224-00001					0.18	0.35	0.43	76	N	NC			38	CA
Vent Narrow Triple-Pane High Altitude Glazing																
1"	Advanced Low-E IG	PEL-N-39-18947-00001	3	3	3	air	0.24	0.24	0.42	67	N	NC	SC	S		
	with grilles-between-the-glass	PEL-N-39-19213-00001					0.24	0.22	0.38	67	N	NC	SC	S		
	with integral grilles	PEL-N-39-19222-00001					0.24	0.22	0.38	67	N	NC	SC	S		
1"	SunDefense Low-E IG	PEL-N-39-18948-00001	3	3	3	air	0.24	0.18	0.39	67	N	NC	SC	S		
	with grilles-between-the-glass	PEL-N-39-19214-00001					0.24	0.16	0.35	67	N	NC	SC	S		
	with integral grilles	PEL-N-39-19223-00001					0.24	0.16	0.35	67	N	NC	SC	S		
1"	NaturalSun Low-E IG	PEL-N-39-18946-00001	3	3	3	air	0.24	0.39	0.48	67	N	NC				
	with grilles-between-the-glass	PEL-N-39-19212-00001					0.24	0.35	0.43	67	N	NC				
	with integral grilles	PEL-N-39-19221-00001					0.24	0.35	0.43	67	N	NC				

R-Value = 1/U-Factor
SHGC = Solar Heat Gain Coefficient
VLT % = Visible Light Transmission
CR = Condensation Resistance
ER = Canadian Energy Rating

(1) Glazing performance values are calculated for Pine using NFRC 100, NFRC 200 and NFRC 500. Thermal performance of other wood species may vary. ENERGY STAR® values are updated to 2016 (Version 6) criteria.

(2) The values shown are based on Canada's updated ENERGY STAR® 2020 initiative.

Based on unit size, some products will use 2.5 mm glass that will have equivalent or improved performance from what is shown.

See the Product Performance section for more detailed information or visit www.energystar.gov for Energy Star guidelines.

Climate Zones

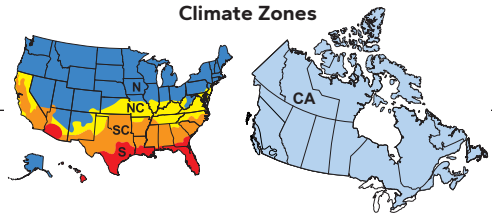

Glazing Performance - Total Unit

Glazing Thickness	Type of Glazing	NFRC Certified Product #	Glass (mm)			Gap Fill	Performance Values [1]				Shaded Areas Meet ENERGY STAR® Performance Criteria in Zones Shown					
			Ext.	Mid	Int.		U-Factor	SHGC	VLT %	CR	U. S. Zone				Canada [2] ER	
Fixed Narrow Triple-Pane Glazing - Wood Exterior											N	NC	SC	S		CA
1"	Advanced Low-E IG	PEL-N-41-37359-00001	3	3	3	argon	0.19	0.27	0.49	72	N	NC			32	CA
	with grilles-between-the-glass	PEL-N-41-37625-00001					0.20	0.24	0.44	72	N	NC	SC	S	29	CA
	with integral grilles	PEL-N-41-37634-00001					0.20	0.24	0.44	72	N	NC	SC	S	29	CA
1"	Advanced Low-E IG	PEL-N-41-37365-00001	3	3	3	Krypton	0.16	0.27	0.49	76	N	NC			35	CA
	with grilles-between-the-glass	PEL-N-41-37631-00001					0.16	0.24	0.44	76	N	NC	SC	S	34	CA
	with integral grilles	PEL-N-41-37640-00001					0.16	0.24	0.44	76	N	NC	SC	S	34	CA
1"	SunDefense™ Low-E IG	PEL-N-41-37360-00001	3	3	3	argon	0.19	0.20	0.45	72	N	NC	SC	S	28	CA
	with grilles-between-the-glass	PEL-N-41-37626-00001					0.19	0.18	0.40	72	N	NC	SC	S	27	CA
	with integral grilles	PEL-N-41-37635-00001					0.19	0.18	0.40	72	N	NC	SC	S	27	CA
1"	SunDefense™ Low-E IG	PEL-N-41-37366-00001	3	3	3	Krypton	0.15	0.20	0.45	77	N	NC	SC	S	33	CA
	with grilles-between-the-glass	PEL-N-41-37632-00001					0.16	0.18	0.40	77	N	NC	SC	S	30	CA
	with integral grilles	PEL-N-41-37641-00001					0.16	0.18	0.40	77	N	NC	SC	S	30	CA
1"	NaturalSun Low-E IG	PEL-N-41-37358-00001	3	3	3	argon	0.20	0.45	0.55	71	N				41	CA
	with grilles-between-the-glass	PEL-N-41-37624-00001					0.20	0.40	0.49	71	N	NC			38	CA
	with integral grilles	PEL-N-41-37633-00001					0.20	0.40	0.49	71	N	NC			38	CA
1"	NaturalSun Low-E IG	PEL-N-41-37364-00001	3	3	3	Krypton	0.16	0.45	0.55	76	N				46	CA
	with grilles-between-the-glass	PEL-N-41-37630-00001					0.16	0.40	0.49	76	N	NC			43	CA
	with integral grilles	PEL-N-41-37639-00001					0.16	0.40	0.49	76	N	NC			43	CA
Fixed Narrow Triple-Pane High Altitude Glazing																
1"	Advanced Low-E IG	PEL-N-41-37362-00001	3	3	3	air	0.23	0.27	0.49	67	N	NC				
	with grilles-between-the-glass	PEL-N-41-37628-00001					0.23	0.24	0.44	67	N	NC	SC	S		
	with integral grilles	PEL-N-41-37637-00001					0.23	0.24	0.44	67	N	NC	SC	S		
1"	SunDefense Low-E IG	PEL-N-41-37363-00001	3	3	3	air	0.23	0.20	0.45	67	N	NC	SC	S		
	with grilles-between-the-glass	PEL-N-41-37629-00001					0.23	0.18	0.40	67	N	NC	SC	S		
	with integral grilles	PEL-N-41-37638-00001					0.23	0.18	0.40	67	N	NC	SC	S		
1"	NaturalSun Low-E IG	PEL-N-41-37361-00001	3	3	3	air	0.23	0.45	0.55	67	N				37	CA
	with grilles-between-the-glass	PEL-N-41-37627-00001					0.24	0.40	0.49	67	N	NC				
	with integral grilles	PEL-N-41-37636-00001					0.24	0.40	0.49	67	N	NC				

R-Value = 1/U-Factor
SHGC = Solar Heat Gain Coefficient
VLT % = Visible Light Transmission
CR = Condensation Resistance
ER = Canadian Energy Rating

Climate Zones

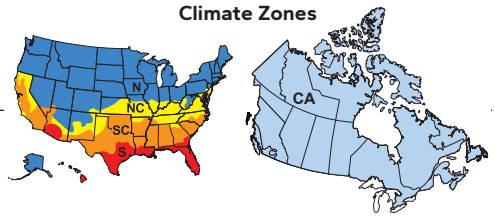

(1) Glazing performance values are calculated for Pine using NFRC 100, NFRC 200 and NFRC 500. Thermal performance of other wood species may vary. ENERGY STAR® values are updated to 2016 (Version 6) criteria.

(2) The values shown are based on Canada's updated ENERGY STAR® 2020 initiative.

Based on unit size, some products will use 2.5 mm glass that will have equivalent or improved performance from what is shown.

See the Product Performance section for more detailed information or visit www.energystar.gov for Energy Star guidelines.

Grille Profiles

Traditional Style Collection - Integral Light Technology ®

Putty Glaze and Ogee Grilles
Clad Exterior - Wood Interior

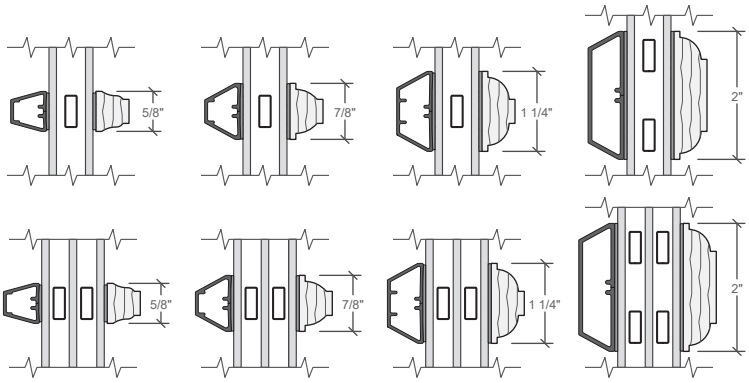

5/8" Regular | 7/8" Regular | 1 1/4" Regular | 2" Regular

Putty Glaze and Ogee Grilles
Wood Exterior - Wood Interior

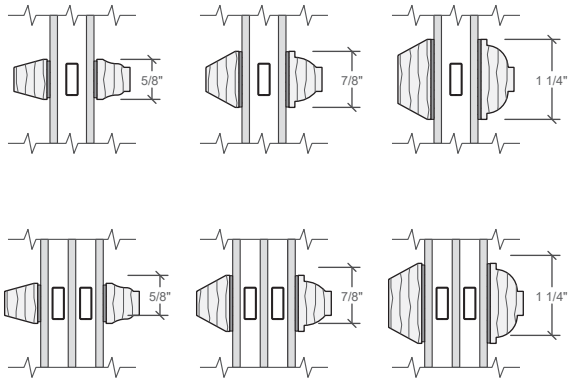

5/8" Regular | 7/8" Regular | 1 1/4" Regular

Ogee Grilles
Clad Exterior - Wood Interior

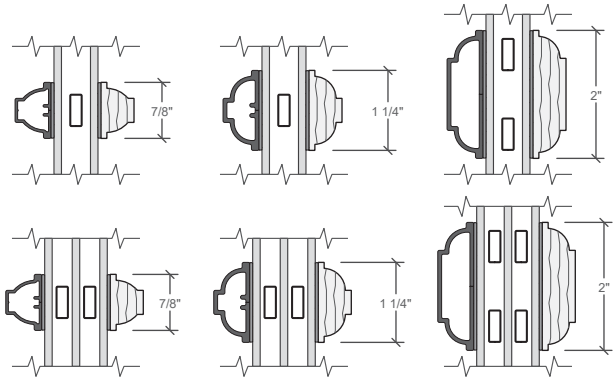

7/8" Regular | 1 1/4" Regular | 2" Regular

Grilles-Between-the-Glass

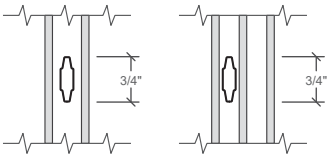

3/4" Contoured | 3/4" Contoured

Interior ILT grilles available in Pine, Mahogany or Douglas Fir to match complete unit.
Wood exterior ILT grilles available in Pine or Mahogany to match complete unit.

Grille Patterns

Integral Light Technology® Grilles

Prairie Lite Patterns

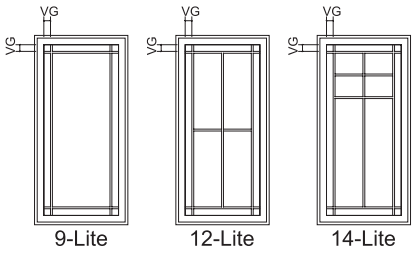

Standard corner lite dimension for Prairie patterns = 2-1/2" VG.

9-Lite

- Available in all standard and special sizes.

12-Lite

- Available in units ≥ 2'0" in width and ≥ 2'0" in height.

14-Lite

- Available in units ≥ 2'0" in width and ≥ 3'0" in height.

Other Available ILT Grille Patterns

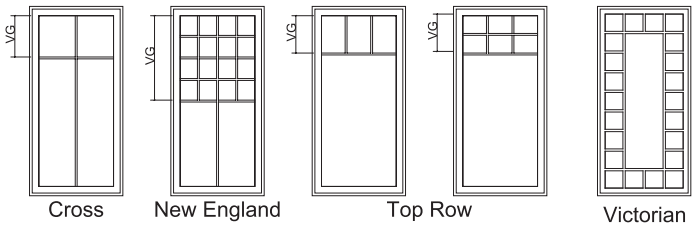

Cross

- Standard visible glass to separator bar dimension = one-quarter of total visible glass height.

New England

- Standard visible glass to separator bar = half of total visible glass height.

Top Row

- Standard visible glass to separator bar = 14" or half of total visible glass height, whichever is smaller.

Grilles-Between-the-Glass

Available GBG Grille Patterns

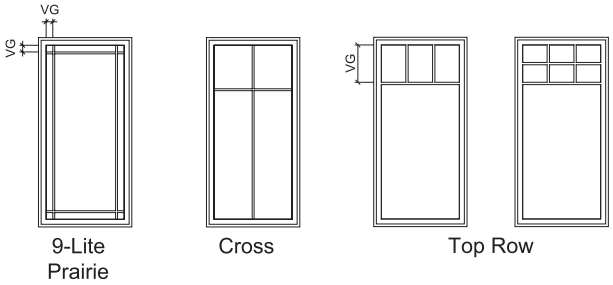

Cross

- Available for units with frame heights ≥ 17".
- Standard visible glass to separator bar = 1/4 of total visible glass height.

Top Row

- Standard visible glass to separator bar = 14"for frame heights > 35".
- Standard visible glass to separator bar = 12"for 35" frame heights and optional for 41" frame height.
- Separator bar at 12" or 16" optional for frames heights > 41".

For Wide patterns, see size tables.

VG = Visible Glass

Lite dimensions noted can vary.

Custom configurations are also available, for details contact your local Pella sales representative.

Pella® Reserve™ Push-Out Casement

Size Tables - Wide

Vent and Fixed Units

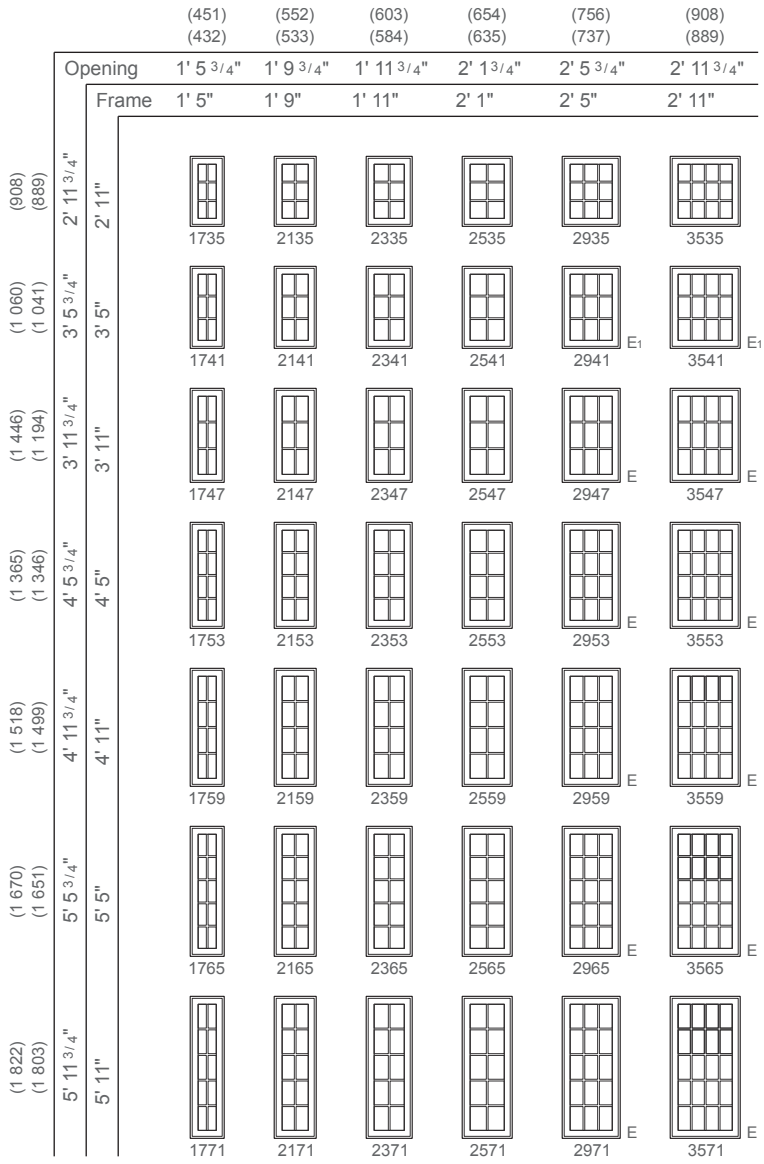

Egress Notes:

Check all applicable local codes for emergency egress requirements.

E = Window meets minimum clear opening of 24" height, 20" width, and 5.7 ft².

E1 = Window meets minimum clear opening of 24" height, 20" width, and 5.0 ft².

Wide - Special Size Frame Dimensions*

	Minimum	Maximum
Vent	1'5" W x 2'3" H (431 x 699)	3'5" W x 8'0" H (1 041 x 2 438)
Fixed	10" W x 10" H (254 x 254)	12'0" W x 12'0" H (3 658 x 3 658)

* Available within size range shown. Frame width cannot exceed frame height. Vent frame area cannot exceed 20 sq. ft. Fixed unit frame area cannot exceed 54.5 sq. ft., and max glass area cannot exceed 48 sq. ft.

Not to scale.

Wide grille patterns shown. Refer to grille section for additional patterns and profiles.

Contact your local Pella representative for the availability of custom sizes smaller or larger than the parameters shown.

Size Tables - Wide

Fixed Units

		(1 060) (1 041)	(1 213) (1 194)	(1 365) (1 346)	(1 518) (1 499)
	Opening	3' 5 3/4"	3' 11 3/4"	4' 5 3/4"	4' 11 3/4"
	Frame	3' 5"	3' 11"	4' 5"	4' 11"
(908) (889)	2' 11 3/4" / 2' 11"	4135	4735	5335	5935
(1 060) (1 041)	3' 5 3/4" / 3' 5"	4141	4741	5341	5941
(1 213) (1 194)	3' 11 3/4" / 3' 11"	4147	4747	5347	5947
(1 365) (1 346)	4' 5 3/4" / 4' 5"	4153	4753	5353	5953
(1 518) (1 499)	4' 11 3/4" / 4' 11"	4159	4759	5359	5959
(1 670) (1 651)	5' 5 3/4" / 5' 5"	4165	4765	5365	5965
(1 822) (1 803)	5' 11 3/4" / 5' 11"	4171	4771	5371	5971

Not to scale.

Wide grille patterns shown. Refer to grille section for additional patterns and profiles.

Contact your local Pella representative for the availability of custom sizes smaller or larger than the parameters shown.

Pella® Reserve™ Push-Out Casement

Size Tables - Narrow

Vent and Fixed Units

		(451) (432)	(552) (533)	(603) (584)	(654) (635)	(756) (737)	(908) (889)
	Opening	1' 5 3/4"	1' 9 3/4"	1' 11 3/4"	2' 1 3/4"	2' 5 3/4"	2' 11 3/4"
	Frame	1' 5"	1' 9"	1' 11"	2' 1"	2' 5"	2' 11"
(908) (889)	2' 11 3/4"	1735	2135	2335	2535	2935	3535
(1 060) (1 041)	3' 5 3/4"	1741	2141	2341	2541	2941 E1	3541 E1
(1 446) (1 194)	3' 11 3/4"	1747	2147	2347	2547	2947 E	3547 E
(1 365) (1 346)	4' 5 3/4"	1753	2153	2353	2553	2953 E	3553 E
(1 518) (1 499)	4' 11 3/4"	1759	2159	2359	2559	2959 E	3559 E
(1 670) (1 651)	5' 5 3/4"	1765	2165	2365	2565	2965 E	3565 E
(1 822) (1 803)	5' 11 3/4"	1771	2171	2371	2571	2971 E	3571 E

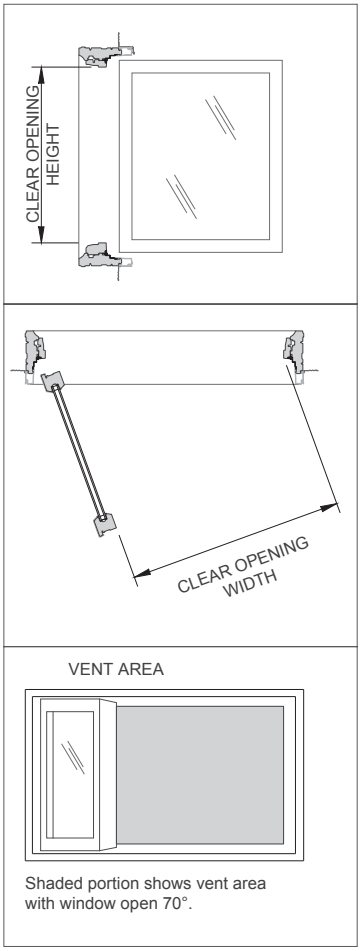

Narrow - Special Size Frame Dimensions*

	Minimum	Maximum
Vent	1'5" W x 1'5" H (431 x 431)	3'5" W x 8'0" H (1 041 x 2 438)
Fixed	10" W x 10" H (254 x 254)	12'0" W x 12'0" H (3 658 x 3 658)

* Available within size range shown. Frame width cannot exceed frame height. Vent frame area cannot exceed 20 sq. ft. Fixed unit frame area cannot exceed 54.5 sq. ft., and max glass area cannot exceed 48 sq. ft.

Egress Notes:

Check all applicable local codes for emergency egress requirements.

E = Window meets minimum clear opening of 24" height, 20" width, and 5.7 ft².

E1 = Window meets minimum clear opening of 24" height, 20" width, and 5.0 ft².

Clear opening (egress) information does not take into consideration the addition of a Rolscreen (or any other accessory) to the product. You should consult your local building code to ensure products with Rolscreens meet egress requirements.

Not to scale.

Wide grille patterns shown. Refer to grille section for additional patterns and profiles.

Contact your local Pella representative for the availability of custom sizes smaller or larger than the parameters shown.

Size Tables - Narrow

Fixed Units

			(1 060) (1 041)	(1 213) (1 194)	(1 365) (1 346)	(1 518) (1 499)
		Opening	3' 5 3/4"	3' 11 3/4"	4' 5 3/4"	4' 11 3/4"
		Frame	3' 5"	3' 11"	4' 5"	4' 11"
(908) (889)	2' 11 3/4"	2' 11"	4135	4735	5335	5935
(1 060) (1 041)	3' 5 3/4"	3' 5"	4141	4741	5341	5941
(1 213) (1 194)	3' 11 3/4"	3' 11"	4147	4747	5347	5947
(1 365) (1 346)	4' 5 3/4"	4' 5"	4153	4753	5353	5953
(1 518) (1 499)	4' 11 3/4"	4' 11"	4159	4759	5359	5959
(1 670) (1 651)	5' 5 3/4"	5' 5"	4165	4765	5365	5965
(1 822) (1 803)	5' 11 3/4"	5' 11"	4171	4771	5371	5971

Not to scale.

Wide grille patterns shown. Refer to grille section for additional patterns and profiles.

Contact your local Pella representative for the availability of custom sizes smaller or larger than the parameters shown.

Design Data - Wide

Vent and Fixed

Unit	Egress	Clear-Opening					Vent Area Ft²	Visible Glass Ft²	Frame Area Ft²	Performance Class & Grade[1]
		Width (Inches)	Height (Inches)	Ft²	Sash Angle (Degrees)	Reach to Close Sash (Inches)				
1735		10-13/16	31-1/4	2.3	70	17-1/8	1.5	1.6	4.1	R30
1741		10-13/16	37-1/4	2.8	70	17-1/8	1.8	2.0	4.8	R30
1747		10-13/16	43-1/4	3.2	70	17-1/8	2.1	2.3	5.5	R30
1753		10-13/16	49-1/4	3.7	70	17-1/8	2.5	2.7	6.3	R30
1759		10-13/16	55-1/4	4.1	70	17-1/8	2.8	3.0	7.0	R30
1765		10-13/16	61-1/4	4.6	70	17-1/8	3.1	3.4	7.7	R30
1771		10-13/16	67-1/4	5.0	70	17-1/8	3.4	3.8	8.4	R30
2135		14-1/2	31-1/4	3.1	70	20-7/8	2.3	2.3	5.1	R30
2141		14-1/2	37-1/4	3.7	70	20-7/8	2.7	2.9	6.0	R30
2147		14-1/2	43-1/4	4.3	70	20-7/8	3.2	3.4	6.9	R30
2153		14-1/2	49-1/4	4.9	70	20-7/8	3.7	3.9	7.7	R30
2159		14-1/2	55-1/4	5.5	70	20-7/8	4.2	4.5	8.6	R30
2165		14-1/2	61-1/4	6.1	70	20-7/8	4.7	5.0	9.5	R30
2171		14-1/2	67-1/4	6.7	70	20-7/8	5.2	5.5	10.4	R30
2335		16-3/8	31-1/4	3.5	70	22-13/16	2.6	2.7	5.6	R30
2341		16-3/8	37-1/4	4.2	70	22-13/16	3.2	3.3	6.5	R30
2347		16-3/8	43-1/4	4.9	70	22-13/16	3.8	3.9	7.5	R30
2353		16-3/8	49-1/4	5.6	70	22-13/16	4.4	4.5	8.5	R30
2359		16-3/8	55-1/4	6.2	70	22-13/16	4.9	5.2	9.4	R30
2365		16-3/8	61-1/4	6.9	70	22-13/16	5.5	5.8	10.4	R30
2371		16-3/8	67-1/4	7.6	70	22-13/16	6.1	6.4	11.3	R30
2535		18-5/16	31-1/4	3.9	70	24-9/16	3.0	3.1	6.1	R30
2541		18-5/16	37-1/4	4.7	70	24-9/16	3.7	3.8	7.1	R30
2547		18-5/16	43-1/4	5.4	70	24-9/16	4.3	4.5	8.2	R30
2553		18-5/16	49-1/4	6.2	70	24-9/16	5.0	5.2	9.2	R30
2559		18-5/16	55-1/4	7.0	70	24-9/16	5.6	5.9	10.2	R30
2565		18-5/16	61-1/4	7.7	70	24-9/16	6.3	6.6	11.3	R30
2571		18-5/16	67-1/4	8.5	70	24-9/16	7.0	7.3	12.3	R30
2935		21-7/8	31-1/4	4.7	70	28-3/8	3.8	3.8	7.0	R30
2941	E1	21-7/8	37-1/4	5.6	70	28-3/8	4.6	4.7	8.3	R30
2947	E	21-7/8	43-1/4	6.5	70	28-3/8	5.4	5.5	9.5	R30
2953	E	21-7/8	49-1/4	7.4	70	28-3/8	6.3	6.4	10.7	R30
2959	E	21-7/8	55-1/4	8.3	70	28-3/8	7.1	7.3	11.9	R30
2965	E	21-7/8	61-1/4	9.3	70	28-3/8	7.9	8.1	13.1	R30
2971	E	21-7/8	67-1/4	10.2	70	28-3/8	8.7	9.0	14.3	R30
3535		21	31-1/4	4.5	49	27-11/16	4.9	4.9	8.5	R30
3541	E1	21	37-1/4	5.4	49	27-11/16	6.0	6.0	10.0	R30
3547	E	21	43-1/4	6.3	49	27-11/16	7.1	7.2	11.4	R30
3553	E	21	49-1/4	7.1	49	27-11/16	8.2	8.3	12.9	R30
3559	E	21	55-1/4	8.0	49	27-11/16	9.2	9.4	14.3	R30
3565	E	21	61-1/4	8.9	49	27-11/16	10.3	10.5	15.8	R30
3571	E	21	67-1/4	9.8	49	27-11/16	11.4	11.6	17.3	R30

Egress Notes:

Check all applicable local codes for emergency egress requirements.

E = Window meets minimum clear opening of 24" height, 20" width, and 5.7 ft².

E1 = Window meets minimum clear opening of 24" height, 20" width, and 5.0 ft².

To convert area to square meters (m²), multiply square feet by 0.0929.

Design Data - Wide

Fixed		
Unit	Visible Glass Ft²	Frame Area Ft²
4135	6.2	10.0
4141	7.6	11.7
4147	9.0	13.4
4153	10.3	15.1
4159	11.7	16.8
4165	13.1	18.5
4171	14.5	20.2
4735	7.3	11.4
4741	9.0	13.4
4747	10.6	15.3
4753	12.2	17.3
4759	13.9	19.3
4765	15.5	21.2
4771	17.1	23.2
5335	8.5	12.9
5341	10.3	15.1
5347	12.2	17.3
5353	14.1	19.5
5359	16.0	21.7
5365	17.9	23.9
5371	19.7	26.1
5935	9.6	14.3
5941	11.7	16.8
5947	13.9	19.3
5953	16.0	21.7
5959	18.1	24.2
5965	20.2	26.6
5971	22.4	29.1

Miscellaneous Formulas

Visible Glass	VGW = Width - 7.936 VGH = Height - 7.936
Actual glass	AGW = VGW + 1 AGH = VGH + 1

To convert area to square meters (m^2), multiply square feet by 0.0929.

Design Data - Narrow

Vent and Fixed Clad

Unit	Egress	Clear Opening					Vent Area Ft²	Visible Glass Ft²	Frame Area Ft²	Performance Class & Grade[1]
		Width (Inches)	Height (Inches)	Ft²	Sash Angle (Degrees)	Reach to Close Sash (Inches)				
1735		7-1/2	31-1/4	1.6	85	18-1/4	1.6	2.3	4.1	CW50
1741		7-1/2	37-1/4	1.9	85	18-1/4	1.9	2.8	4.8	CW50
1747		7-1/2	43-1/4	2.3	85	18-1/4	2.3	3.2	5.5	CW50
1753		7-1/2	49-1/4	2.6	85	18-1/4	2.6	3.7	6.2	CW50
1759		7-1/2	55-1/4	2.9	85	18-1/4	2.9	4.2	6.9	CW50
1765		7-1/2	61-1/4	3.2	85	18-1/4	3.2	4.6	7.6	CW50
1771		7-1/2	67-1/4	3.5	85	18-1/4	3.5	5.1	8.3	CW50
2135		10-5/8	31-1/4	2.3	70	19-1/2	2.3	3.1	5.1	CW50
2141		10-5/8	37-1/4	2.7	70	19-1/2	2.7	3.7	5.9	CW50
2147		10-5/8	43-1/4	3.2	70	19-1/2	3.2	4.4	6.8	CW50
2153		10-5/8	49-1/4	3.6	70	19-1/2	3.6	5.0	7.7	CW50
2159		10-5/8	55-1/4	4.1	70	19-1/2	4.1	5.6	8.6	CW50
2165		10-5/8	61-1/4	4.5	70	19-1/2	4.5	6.3	9.4	CW50
2171		10-5/8	67-1/4	5.0	70	19-1/2	5.0	6.9	10.3	CW50
2335		14-1/2	31-1/4	3.1	70	22	3.1	3.5	5.5	CW50
2341		14-1/2	37-1/4	3.8	70	22	3.8	4.2	6.5	CW50
2347		14-1/2	43-1/4	4.4	70	22	4.4	4.9	7.5	CW50
2353		14-1/2	49-1/4	5.0	70	22	5.0	5.7	8.4	CW50
2359		14-1/2	55-1/4	5.6	70	22	5.6	6.4	9.4	CW50
2365		14-1/2	61-1/4	6.2	70	22	6.2	7.1	10.3	CW50
2371		14-1/2	67-1/4	6.8	70	22	6.8	7.8	11.3	CW50
2535		16-1/4	31-1/4	3.5	70	25	3.5	3.9	6.0	CW50
2541		16-1/4	37-1/4	4.2	70	25	4.2	4.7	7.1	CW50
2547		16-1/4	43-1/4	4.9	70	25	4.9	5.5	8.1	CW50
2553		16-1/4	49-1/4	5.6	70	25	5.6	6.3	9.2	CW50
2559		16-1/4	55-1/4	6.2	70	25	6.2	7.1	10.2	CW50
2565		16-1/4	61-1/4	6.9	70	25	6.9	7.9	11.2	CW50
2571		16-1/4	67-1/4	7.6	70	25	7.6	8.7	12.3	CW50
2935		20	31-1/4	4.3	57	25-1/2	4.3	4.7	7.0	CW50
2941	E1	20	37-1/4	5.2	57	25-1/2	5.2	5.7	8.2	CW50
2947	E	20	43-1/4	6.0	57	25-1/2	6.0	6.7	9.4	CW50
2953	E	20	49-1/4	6.8	57	25-1/2	6.8	7.6	10.6	CW50
2959	E	20	55-1/4	7.7	57	25-1/2	7.7	8.6	11.8	CW50
2965	E	20	61-1/4	8.5	57	25-1/2	8.5	9.6	13.0	CW50
2971	E	20	67-1/4	9.3	57	25-1/2	9.3	10.5	14.2	CW50
3535		20-1/8	31-1/4	4.4	45	26	4.4	5.9	8.5	CW50
3541	E1	20-1/8	37-1/4	5.2	45	26	5.2	7.2	9.9	CW50
3547	E	20-1/8	43-1/4	6.0	45	26	6.0	8.4	11.4	CW50
3553	E	20-1/8	49-1/4	6.9	45	26	6.9	9.6	12.8	CW50
3559	E	20-1/8	55-1/4	7.7	45	26	7.7	10.8	14.3	CW50
3565	E	20-1/8	61-1/4	8.6	45	26	8.6	12.0	15.7	CW50
3571	E	20-1/8	67-1/4	9.4	45	26	9.4	13.3	17.2	CW50

Egress Notes:

Check all applicable local codes for emergency egress requirements.

E = Window meets minimum clear opening of 24" height, 20" width, and 5.7 ft².

E1 = Window meets minimum clear opening of 24" height, 20" width, and 5.0 ft².

Clear opening (egress) information does not take into consideration the addition of a Rolscreen (or any other accessory) to the product. You should consult your local building code to ensure products with Rolscreens meet egress requirements.

(1) Maximum performance when glazed with the appropriate glass thickness.

To convert area to square meters (m²), multiply square feet by 0.0929.

Design Data - Narrow

Fixed - Wood Exterior			
Unit	Visible Glass Ft²	Frame Area Ft²	Performance Class & Grade[1]
4135	7.2	10.0	CW50
4141	8.6	11.7	CW50
4147	10.1	13.4	CW50
4153	11.6	15.1	CW50
4159	13.0	16.8	CW50
4165	14.5	18.5	CW50
4171	16.0	20.2	CW50
4735	8.4	11.4	CW50
4741	10.1	13.4	CW50
4747	11.8	15.3	CW50
4753	13.5	17.3	CW50
4759	15.3	19.3	CW50
4765	17.0	21.2	CW50
4771	18.7	23.2	CW50
5335	9.6	12.9	CW50
5341	11.6	15.1	CW50
5347	13.5	17.3	CW50
5353	15.5	19.5	CW50
5359	17.5	21.7	CW50
5365	19.4	23.9	CW50
5371	21.4	26.1	CW50
5935	10.8	14.3	CW50
5941	13.0	16.8	CW50
5947	15.3	19.3	CW50
5953	17.5	21.7	CW50
5959	19.7	24.2	CW50
5965	21.9	26.6	CW50
5971	24.1	29.1	CW50

Miscellaneous Formulas

Visible Glass	Width = Frame – 5-3/4" Height = Frame – 5-3/4"
Actual glass	Width = Frame – 4-3/8" Height = Frame – 4-3/8"

(1) Maximum performance when glazed with the appropriate glass thickness.

To convert area to square meters (m^2), multiply square feet by 0.0929.

Pella® Reserve™ Push-Out Casement

Detailed Product Description - Wide Aluminum-Clad Exterior

Frame

- Select woods, immersion treated with Pella's EnduraGuard® wood protection formula in accordance with WDMA I.S.-4. The EnduraGuard formula includes three active ingredients for protection against the effects of moisture, decay, stains from mold and mildew. Plus, an additional ingredient adds protection against termite damage.
- Interior exposed surfaces are [pine] [mahogany] [douglas fir] (standard rectangular units only). Any curved member may have visible finger-jointed surfaces.
- Exterior surfaces are clad with aluminum.
- Overall frame depth is 5" (127mm) for a wall depth of 3-11/16" (94mm).
- Optional factory-applied jamb extensions available between 4-9/16" (116mm) and 7-3/16" (183mm) wall depths.

Sash

- Select woods, immersion treated with Pella's EnduraGuard® wood protection formula in accordance with WDMA I.S.-4. The EnduraGuard formula includes three active ingredients for protection against the effects of moisture, decay, stains from mold and mildew. Plus, an additional ingredient adds protection against termite damage.
- Interior exposed surfaces are clear [pine] [mahogany] [douglas fir] (standard rectangular units only). Any curved member may have visible finger-jointed surfaces.
- Exterior surfaces are clad with aluminum and sealed.
- Corners mortised and tenoned, glued and secured with metal fasteners.
- Sash thickness is [1-13/16" (46mm) for 11/16"] [1-11/16" (43mm) for 9/16"] [2-1/8" (54mm) for 1"] glazings.
- Exterior sash profile is [ogee] [putty glaze], interior sash profile is ogee.

Weatherstripping

- Dual weatherstripping.
  - Flexible santoprene material compressed between frame and sash for positive seal on all four sides.
  - Secondary polyvinyl chloride leaf-type weatherstrip between edge of sash and frame.

Glazing System [1]

- Quality float glass complying with ASTM C 1036.
- Silicone-glazed 11/16" dual-seal insulating glass [[annealed] [tempered]] [[clear] [Advanced Low-E coated with argon]] [SunDefense™ Low-E with Argon] [AdvancedComfort Low-E] [NaturalSun Low-E] [[bronze] [gray] [green] air-filled Advanced Low-E coated]].
- Custom and high altitude glazing available for 11/16" glazing only.

Exterior

- Exterior aluminum surfaces are finished with EnduraClad® multi-stage finish system.
  - Color is [Standard] [Feature] [custom][2].

– or –

- Exterior aluminum surfaces are finished with EnduraClad Plus 70% fluoropolymer-based multi-stage finish system.
  - Color is [Standard] [Feature] [custom][2].

Interior

- [Unfinished, ready for site finishing] [Factory-primed with one coat acrylic latex] [Pine: [Factory prefinished [paint] [stain][2]].

Hardware

- Multi-point lock system—A single handle locking system operates positive-acting arms that engages multiple locking points around the sash.
- Finish of lock handle is [baked enamel, [Champagne] [White] [Brown]] [Satin Brass] [Satin Nickel] [Oil-Rubbed Bronze]. All vent units are available with left- or right-hand hinging.
- Optional historical visible stay bar available in [Satin Brass] [Satin Nickel] [Oil-Rubbed Bronze].

Optional Products

Grilles

- Integral Light Technology® Grilles
  - Integral Light Technology® Grilles
  - Interior grilles are [5/8"] [7/8"] [1-1/4"] [2"] ogee profile that are solid [Pine] [Mahogany] [Douglas Fir]. Interior surfaces are [unfinished, ready for site finishing] [factory primed] [pine: factory prefinished [paint] [stain][2]].
  - Exterior grilles are [5/8" putty profile] [7/8" [putty] [ogee] profile] [1-1/4" [putty] [ogee] profile] [2" ogee profile] that are extruded aluminum.
  - Patterns are [Wide] [Prairie] [Top Row] [Cross] [New England] [Victorian] [Simulated French].
  - Insulating glass contains non-glare spacer between the panes of glass.
  - Bars are adhered to both sides of the insulating glass with VHB acrylic adhesive tape and aligned with the non-glare spacer.

– or –

- Grilles-Between-the-Glass [3]
  - Insulating glass contains 3/4" contoured aluminum grilles permanently installed between two panes of glass.
  - Patterns are [Wide] [Prairie] [Cross] [Top Row] [Custom – Equally Divided].
  - Interior color is [Black] [White] [Brown[4]] [Fossil] [Harvest] [Cordovan] [Ivory] [Tan[4]] [Brickstone] [Putty[4]].
  - Exterior color[5] is [standard] [feature][2].

Hinged In-Swing Wood Screens

- InView™ Fiberglass Screen
  - Vinyl-coated 18/18 mesh fiberglass screen cloth complying with SMA 1201, set in a wood frame fitted to inside of window, supplied complete with all necessary hardware.
  - Screen frame interior exposed surfaces are [pine] [mahogany] [douglas fir].
  - Screen hardware available in [Bright Brass] [Satin Nickel] [Oil-Rubbed Bronze].

(1) Insulating glass with argon is Low-E coated (except high altitude). All other insulating glass (including high altitude Low-E) is air-filled.

(2) Contact your local Pella sales representative for current color options.

(3) Available in clear, Low-E and obscure insulating glass.

(4) Tan, Brown or Putty Interior GBG colors are available in single-tone (Brown/Brown, Tan/Tan or Putty/Putty). Other interior colors are also available with Tan or Brown exterior.

(5) Appearance of exterior grille color will vary depending on Low-E coating on glass

Detailed Product Description - Wide Wood Exterior

Frame

- Select woods, immersion treated with Pella's EnduraGuard® wood protection formula in accordance with WDMA I.S.-4. The EnduraGuard formula includes three active ingredients for protection against the effects of moisture, decay, stains from mold and mildew. Plus, an additional ingredient adds protection against termite damage.
- Interior exposed surfaces are [Pine] [Mahogany] (standard rectangular windows only). Any curved member may have visible finger-jointed surfaces.
- Exterior surfaces are [Pine: primed] [Mahogany: [primed] [ready-to-stain]].
- Overall frame depth is 4-3/8" (111mm) for a wall depth of 4-3/16" (106mm).
- Optional factory-applied jamb extensions available between 4-9/16" (116mm) and 7-3/16" (183mm) wall depths, with Pella's standard wood exterior trim.

Sash

- Select woods, immersion treated with Pella's EnduraGuard® wood protection formula in accordance with WDMA I.S.-4. The EnduraGuard formula includes three active ingredients for protection against the effects of moisture, decay, stains from mold and mildew. Plus, an additional ingredient adds protection against termite damage.
- Interior exposed surfaces are [Pine] [Mahogany] (standard rectangular windows only). Any curved member may have visible finger-jointed surfaces.
- Exterior surfaces are [Pine: primed] [Mahogany: [primed] [ready-to-stain]].
- Corners mortised and tenoned, glued and secured with metal fasteners.
- Sash thickness is 1-13/16" (46mm).

Weatherstripping

- Dual weatherstripping.
  - Flexible santoprene material compressed between frame and sash for positive seal on all four sides.
  - Secondary polyvinyl chloride leaf-type weatherstrip between edge of sash and frame.

Glazing System [1]

- Quality float glass complying with ASTM C 1036.
- Silicone-glazed 11/16" dual-seal insulating glass [[annealed] [tempered]] [[clear] [Advanced Low-E coated with argon]] [SunDefense™ Low-E with Argon] [AdvancedComfort Low-E] [NaturalSun Low-E] [[bronze] [gray] [green] air-filled Advanced Low-E coated]].
- Custom and high altitude [with argon] glazing available.

Interior

- [Unfinished, ready for site finishing] [primed with one coat acrylic latex] [Pine: [Factory prefinished [paint] [stain] [3]].

Hardware

- Multi-point lock system—A single handle locking system operates positive-acting arms that engages multiple locking points around the sash.
- Finish of lock handle is [baked enamel, [Champagne] [White] [Brown]] [Satin Brass] [Satin Nickel] [Oil-Rubbed Bronze]. All vent units are available with left- or right-hand hinging.
- Optional historical visible stay bar available in [Satin Brass] [Satin Nickel] [Oil-Rubbed Bronze].

Optional Products

Grilles

- Integral Light Technology® Grilles
  - Interior grilles are [5/8"] [7/8"] [1-1/4"] [2"] ogee profile that are solid [pine] [mahogany]. Interior surfaces are [unfinished, ready for site finishing] [factory primed] [pine: factory prefinished [paint] [stain] [3]].
  - Exterior grilles are solid [5/8" putty profile] [7/8" [putty] [ogee] profile] [1-1/4" [putty] [ogee] profile] [2" ogee profile] that are [pine] [mahogany]. Exterior surfaces are water repellent, preservative-treated in accordance with WDMA I.S.-4, and are [unfinished, ready for site finishing] [factory primed].
  - Patterns are [Wide] [Prairie] [Top Row] [Cross] [New England] [Victorian] [Simulated French].
  - Insulating glass contains non-glare spacer between the panes of glass.
  - Grilles are adhered to both sides of the insulating glass with VHB acrylic adhesive tape and aligned with the non-glare spacer.

– or –

- Grilles-Between-the-Glass [2]
  - Insulating glass contains 3/4" contoured aluminum grilles permanently installed between two panes of glass.
  - Patterns are [Wide] [Prairie] [Cross] [Top Row] [Custom – Equally Divided].
  - Interior color is [Black] [White] [Brown [4]] [Fossil] [Harvest] [Cordovan] [Ivory] [Tan [4]] [Brickstone] [Putty [4]].

Hinged In-Swing Wood Screens

- InView™ Fiberglass
  - Vinyl-coated 18/18 mesh fiberglass screen cloth complying with SMA 1201, set in a wood frame fitted to inside of window, supplied complete with all necessary hardware.
  - Screen frame interior exposed surfaces are [pine] [mahogany] [douglas fir].
  - Screen hardware available in [Bright Brass] [Satin Nickel] [Oil-Rubbed Bronze].

(1) Insulating glass with argon is Low-E coated. All other insulating glass is air-filled.

(2) Available in clear, Low-E and obscure insulating glass.

(3) Contact your local Pella sales representative for current color options.

(4) Tan, brown and putty Interior GBG colors are available in single-tone (brown/brown, tan/tan or putty/putty). Other interior colors are also available with tan or brown exterior.

(5) Appearance of exterior grille color will vary depending on Low-E coating on glass.

Pella® Reserve™ Push-Out Casement

Detailed Product Description - Narrow Aluminum-Clad Exterior

Frame

- Select woods, immersion treated with Pella's EnduraGuard® wood protection formula in accordance with WDMA I.S.-4. The EnduraGuard formula includes three active ingredients for protection against the effects of moisture, decay, stains from mold and mildew. Plus, an additional ingredient adds protection against termite damage.
- Interior exposed surfaces are [pine] [mahogany] [douglas fir] (standard rectangular units only). Any curved member may have visible finger-jointed surfaces.
- Exterior surfaces are clad with aluminum.
- Overall frame depth is 5" (127mm) for a wall depth of 3-11/16" (94mm).
- Optional factory-applied jamb extensions available between 4-9/16" (116mm) and 7-3/16" (183mm) wall depths.

Sash

- Select woods, immersion treated with Pella's EnduraGuard® wood protection formula in accordance with WDMA I.S.-4. The EnduraGuard formula includes three active ingredients for protection against the effects of moisture, decay, stains from mold and mildew. Plus, an additional ingredient adds protection against termite damage.
- Interior exposed surfaces are clear [pine] [mahogany] [douglas fir] (standard rectangular units only). Any curved member may have visible finger-jointed surfaces.
- Exterior surfaces are clad with aluminum, lap-jointed and sealed.
- Corners mortised and tenoned, glued and secured with metal fasteners.
- Sash thickness is [1-13/16" (46mm) for 11/16"] [1-11/16" (43mm) for 9/16"] [2-1/8" (54mm) for 1"] glazings.
- Exterior sash profile is [ogee] [putty glaze], interior sash profile is ogee.

Weatherstripping

- Dual weatherstripping.
  - Flexible santoprene material compressed between frame and sash for positive seal on all four sides.
  - Secondary polyvinyl chloride leaf-type weather strip between edge of sash and frame.

Glazing System [1]

- Quality float glass complying with ASTM C 1036.
- Silicone-glazed 11/16" dual-seal insulating glass [[annealed] [tempered]] [[clear] [Advanced Low-E coated with argon]] [SunDefense™ Low-E with Argon] [AdvancedComfort Low-E] [NaturalSun Low-E] [[bronze] [gray] [green] air-filled Advanced Low-E coated]].
- Custom and high altitude [with Argon] glazing available for 11/16" glazing only.

– or –

- Silicone-glazed triple-pane 1-1/16" dual-seal insulating glass [[annealed] [tempered]] [[Advanced Low-E with argon] [Advanced Low-E with krypton] [SunDefense™ Low-E with argon] [SunDefense™ Low-E with krypton] [NaturalSun Low-E with krypton] [Obscure [standard] [fern]].

Exterior

- Exterior aluminum surfaces are finished with EnduraClad® multi-stage finish system.
  - Color is [Standard] [Feature] [custom] [2].

– or –

- Exterior aluminum surfaces are finished with EnduraClad Plus 70% fluoropolymer-based multi-stage finish system.
  - Color is [Standard] [Feature] [custom] [2].

Interior

- [Unfinished, ready for site finishing] [Factory-primed with one coat acrylic latex] [Pine: [Factory prefinished [paint] [stain] [2]].

Hardware

- Finish of finger pull handle is [baked enamel, [Champagne] [White] [Brown]] [Satin Brass] [Satin Nickel] [Oil-Rubbed Bronze]. All vent units are available with left- or right-hand hinging.
- SureLock® System—A single handle locking system operates positive-acting arms that reach out and pull the sash into a locked position: one installed on units 29" and smaller frame height, two unison operating locks installed on units over 29" frame height.
- Lock handle finish is [baked enamel, [Champagne] [White] [Brown]] [Satin Brass] [Satin Nickel] [Oil-Rubbed Bronze].

Optional Products

Grilles

- Integral Light Technology® Grilles
  - Interior grilles are [5/8"] [7/8"] [1-1/4"] [2"] ogee profile that are solid [Pine] [mahogany] [douglas fir]. Interior surfaces are [unfinished, ready for site finishing] [factory primed] [pine: factory prefinished [paint] [stain] [2]].
  - Exterior grilles are [5/8" putty profile] [7/8" [putty] [ogee] profile] [1-1/4" [putty] [ogee] profile] [2" ogee profile] that are extruded aluminum.
  - Patterns are [Wide] [Prairie] [Top Row] [Cross] [New England] [Victorian] [Simulated French].
  - Insulating glass contains non-glare spacer between the panes of glass.
  - Bars are adhered to both sides of the insulating glass with VHB acrylic adhesive tape and aligned with the non-glare spacer.

– or –

- Grilles-Between-the-Glass [1]
  - Insulating glass contains 3/4" contoured aluminum grilles permanently installed between two panes of glass.
  - Patterns are [Wide] [Prairie] [Cross] [Top Row] [Custom – Equally Divided].
  - Interior color is [Black] [White] [Brown [4]] [Fossil] [Harvest] [Cordovan] [Ivory] [Tan [4]] [Brickstone] [Putty [4]].
  - Exterior color [5] is [standard [2]].

Screens

- InView™ Fiberglass screens
  - Vinyl-coated 18/18 mesh fiberglass screen cloth complying with SMA 1201, set in aluminum frame fitted to inside of window, supplied complete with all necessary hardware.
  - Screen frame finish is [baked enamel [Champagne] [White] [Brown] [Black]] [Wrapped in wood veneer, finished to match interior finish].

– or –

- Rolscreen® Retractable (for rectangular units only)
  - Self-storing, rolling, black vinyl-coated 18/16 mesh fiberglass screen cloth complying with ASTM D 3656 and SMA 1201 mounted behind overhead cover.
  - Cover finish is [factory prefinished paint] [[pine] [mahogany] [douglas fir] veneer wrapped over extruded aluminum with factory prefinished [stain] [paint] [2]].
  - Guides are aluminum extrusion with [[pine] [mahogany] [douglas fir] veneer wrapped over extruded aluminum with factory prefinished [stain] [paint] [2]].

Hardware

- Optional limited opening hardware available for vent units in stainless steel; nominal 3" opening.

(1) Insulating glass with argon is Low-E coated (except high altitude). All other insulating glass (including high altitude Low-E) is air-filled.

(2) Contact your local Pella sales representative for current color options.

(3) Available in clear, Low-E or obscure insulating glass.

(4) Tan, Brown or Putty Interior GBG colors are available in single-tone (Brown/Brown, Tan/Tan or Putty/Putty). Other interior colors are also available with Tan or Brown exterior.

(5) Appearance of exterior grille color will vary depending on Low-E coating on glass.

Detailed Product Description - Narrow Wood Exterior

Frame

- Select woods, immersion treated with Pella's EnduraGuard® wood protection formula in accordance with WDMA I.S.-4. The EnduraGuard formula includes three active ingredients for protection against the effects of moisture, decay, stains from mold and mildew. Plus, an additional ingredient adds protection against termite damage.
- Interior exposed surfaces are [Pine] [Mahogany] (standard rectangular windows only). Any curved member may have visible finger-jointed surfaces.
- Exterior surfaces are [Pine: primed] [Mahogany: [primed] [ready-to-stain]].
- Overall frame depth is 4-3/8" (111mm) for a wall depth of 4-3/16" (106mm).
- Optional factory-applied jamb extensions available between 4-9/16" (116mm) and 7-3/16" (183mm) wall depths, with Pella's standard wood exterior trim.

Sash

- Select woods, immersion treated with Pella's EnduraGuard® wood protection formula in accordance with WDMA I.S.-4. The EnduraGuard formula includes three active ingredients for protection against the effects of moisture, decay, stains from mold and mildew. Plus, an additional ingredient adds protection against termite damage.
- Interior exposed surfaces are [Pine] [Mahogany] (standard rectangular windows only). Any curved member may have visible finger-jointed surfaces.
- Exterior surfaces are [Pine: primed] [Mahogany: [primed] [ready-to-stain]].
- Corners mortised and tenoned, glued and secured with metal fasteners.
- Sash thickness is 1-13/16" (46mm).
- Exterior sash profile is putty glaze, interior sash profile is ogee.

Weatherstripping

- Dual weatherstripping.
  - Flexible santoprene material compressed between frame and sash for positive seal on all four sides.
  - Secondary polyvinyl chloride leaf-type weather strip between edge of sash and frame.

Glazing System [1]

- Quality float glass complying with ASTM C 1036.
- Silicone-glazed 11/16" dual-seal insulating glass [[annealed] [tempered]] [[clear] [Advanced Low-E coated with argon]] [SunDefense™ Low-E with Argon] [AdvancedComfort Low-E] [NaturalSun Low-E] [[bronze] [gray] [green] air-filled Advanced Low-E coated]].
- Custom and high altitude [with Argon] glazing available for 11/16" glazing only.

– or –

- Silicone-glazed triple-pane 1-1/16" dual-seal insulating glass [[annealed] [tempered]] [[Advanced Low-E with argon] [Advanced Low-E with krypton] [SunDefense™ Low-E with argon] [SunDefense™ Low-E with krypton] [NaturalSun Low-E with krypton] [Obscure [standard] [fern]].

Interior

- [Unfinished, ready for site finishing] [primed with one coat acrylic latex] [Pine: [Factory prefinished [paint] [stain][3]].

Hardware

- Finish of finger pull handle is [baked enamel, [Champagne] [White] [Brown]] [Satin Brass] [Satin Nickel] [Oil-Rubbed Bronze]. All vent units are available with left- or right-hand hinging.
- SureLock® System—A single handle locking system operates positive-acting arms that reach out and pull the sash into a locked position: one installed on units 29" and smaller frame height, two unison operating locks installed on units 29" and smaller frame height, two unison operating locks installed on units over 29" frame height.
- Lock handle finish is [baked enamel [champagne] [white] [brown]] [satin brass] [satin nickel] [oil-rubbed bronze].

Optional Products

Grilles

- Integral Light Technology® Grilles
  - Interior grilles are [5/8"] [7/8"] [1-1/4"] [2"] ogee profile that are solid [pine] [mahogany]. Interior surfaces are [unfinished, ready for site finishing] [factory primed] [pine: factory prefinished [paint] [stain][3]].
  - Exterior grilles are solid [5/8" putty profile] [7/8" [putty] [ogee] profile] [1-1/4" [putty] [ogee] profile] [2" ogee profile] that are [pine] [mahogany]. Exterior surfaces are water repellent, preservative-treated in accordance with WDMA I.S.-4, and are [unfinished, ready for site finishing] [factory primed].
  - Patterns are [Wide] [Prairie] [Top Row] [Cross] [New England] [Victorian] [Simulated French].
  - Insulating glass contains non-glare spacer between the panes of glass.
  - Grilles are adhered to both sides of the insulating glass with VHB acrylic adhesive tape and aligned with the non-glare spacer.

– or –

- Grilles-Between-the-Glass [1]
  - Insulating glass contains 3/4" contoured aluminum grilles permanently installed between two panes of glass.
  - Patterns are [Wide] [Prairie] [Cross] [Top Row] [Custom – Equally Divided].
  - Interior color is [Black] [White] [Brown [4]] [Fossil] [Harvest] [Cordovan] [Ivory] [Tan [4]] [Brickstone] [Putty [4]].

Screens

- InView™ Fiberglass screens
  - Vinyl-coated 18/18 mesh fiberglass screen cloth complying with SMA 1201, set in aluminum frame fitted to inside of window, supplied complete with all necessary hardware.
  - Screen frame finish is baked enamel, [champagne] [white] [brown].

– or –

- Rolscreen® Retractable (for rectangular units only)
  - Self-storing, rolling, black vinyl-coated 18 / 16 mesh fiberglass screen cloth complying with ASTM D 3656 and SMA 1201 mounted behind overhead cover.
  - Cover finish is [factory prefinished paint] [[pine] [mahogany] veneer wrapped over extruded aluminum with factory prefinished [stain] [paint][3]].
  - Guides are aluminum extrusion with [[pine] [mahogany] veneer wrapped over extruded aluminum with factory prefinished [stain] [paint][3]].

Hardware

- Optional limited opening hardware available for vent units in stainless steel; nominal 3" opening.

(1) Insulating glass with argon is Low-E coated. All other insulating glass is air-filled.

(2) Available in clear, Low-E or obscure insulating glass.

(3) Contact your local Pella sales representative for current color options.

(4) Tan, brown or putty Interior GBG colors are available in single-tone (brown/brown, tan/tan or putty/putty). Other interior colors are also available with tan or brown exterior.

(5) Appearance of exterior grille color will vary depending on Low-E coating on glass

Unit Sections - Wide Aluminum-Clad Exterior

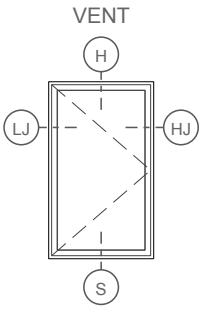

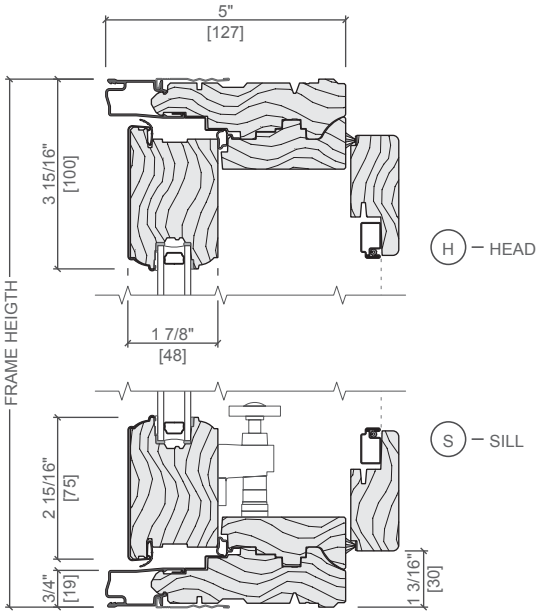

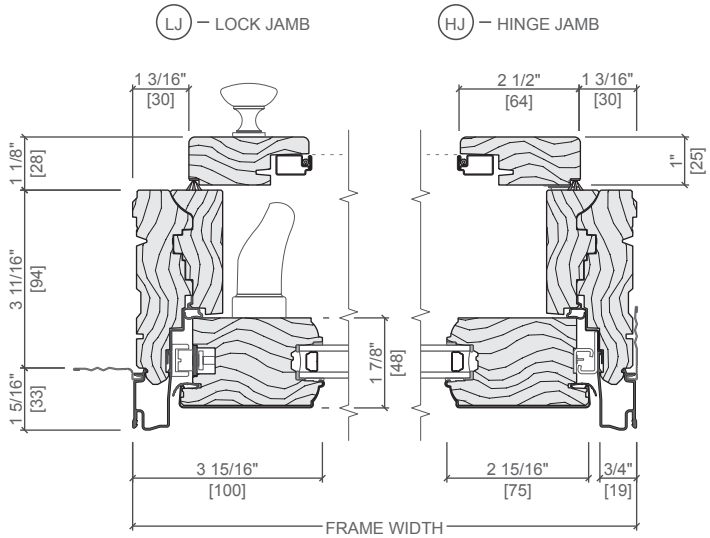

Scale 3" = 1' 0"

All dimensions are approximate.

Unit Sections- Wide Wood Exterior

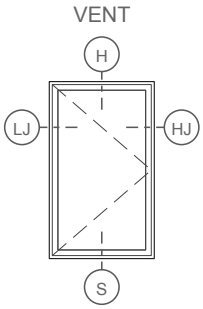

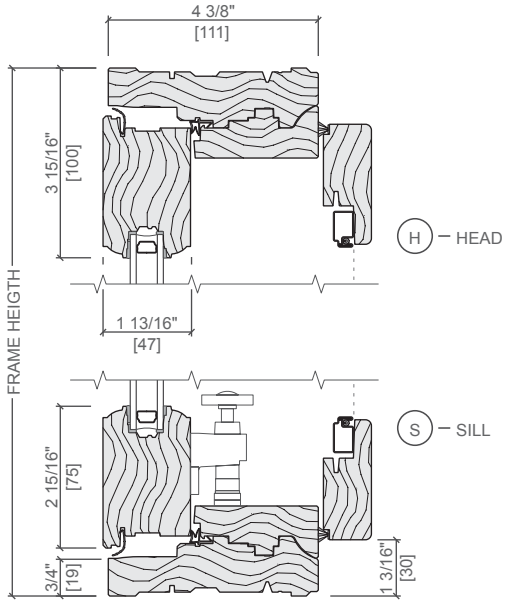

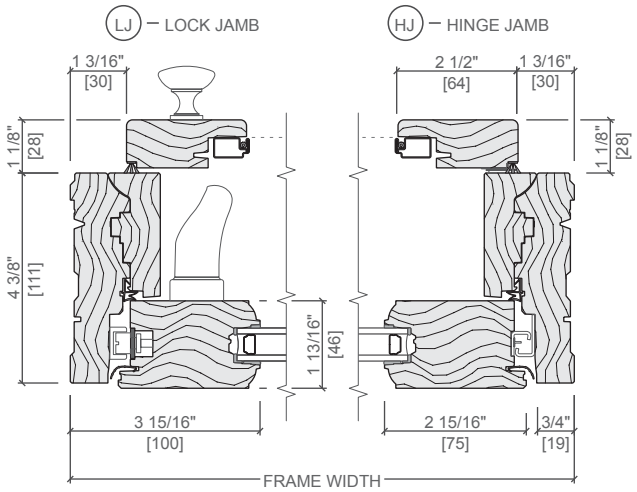

Scale 3" = 1' 0"

All dimensions are approximate.

Unit Sections - Narrow Aluminum-Clad Exterior

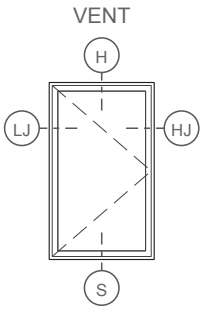

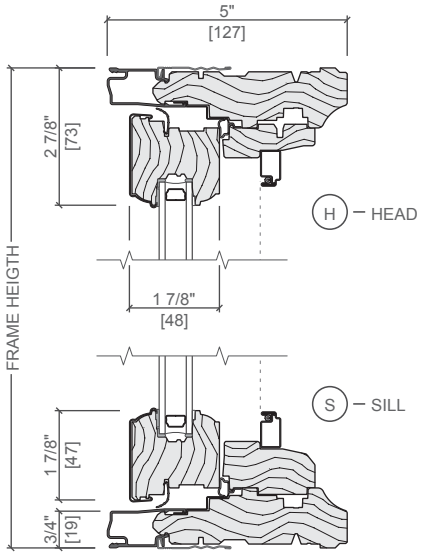

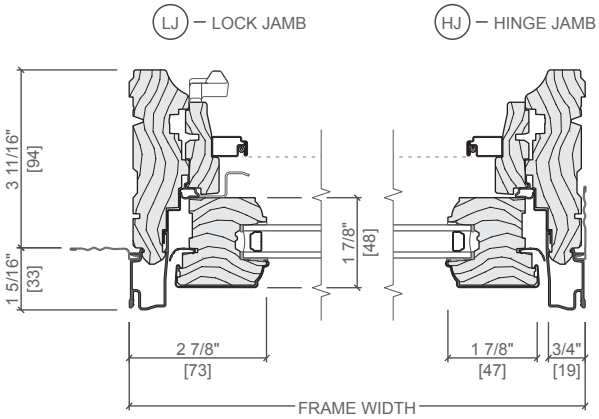

Scale 3" = 1' 0"

All dimensions are approximate.

Unit Sections- Narrow Wood Exterior

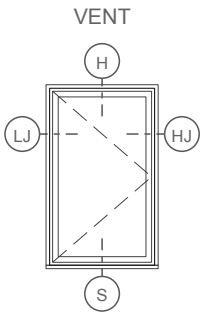

1-78" Brickmould #3443
1-1/8" Subsill #3544
Shown

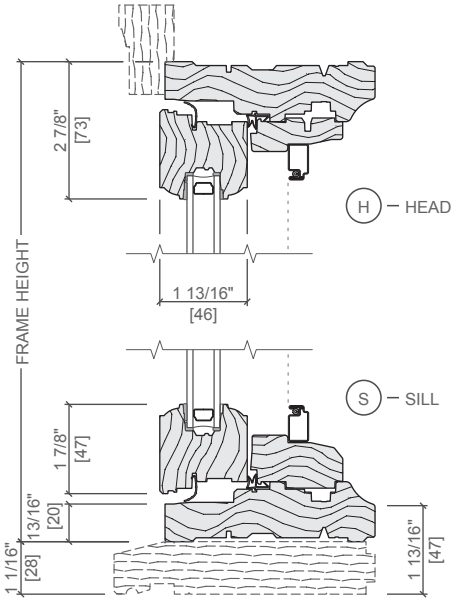

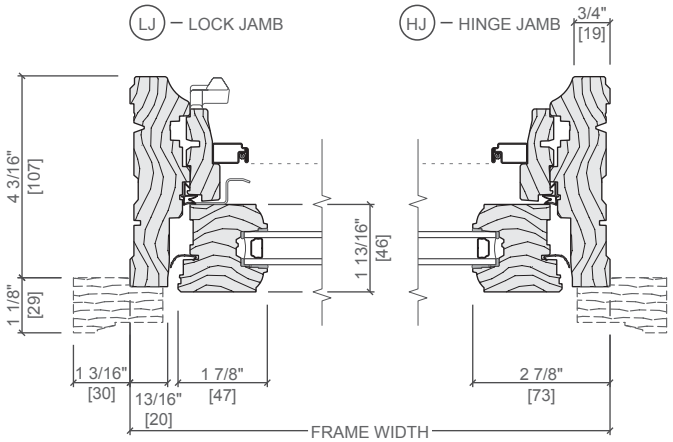

Scale 3" = 1' 0"

All dimensions are approximate.